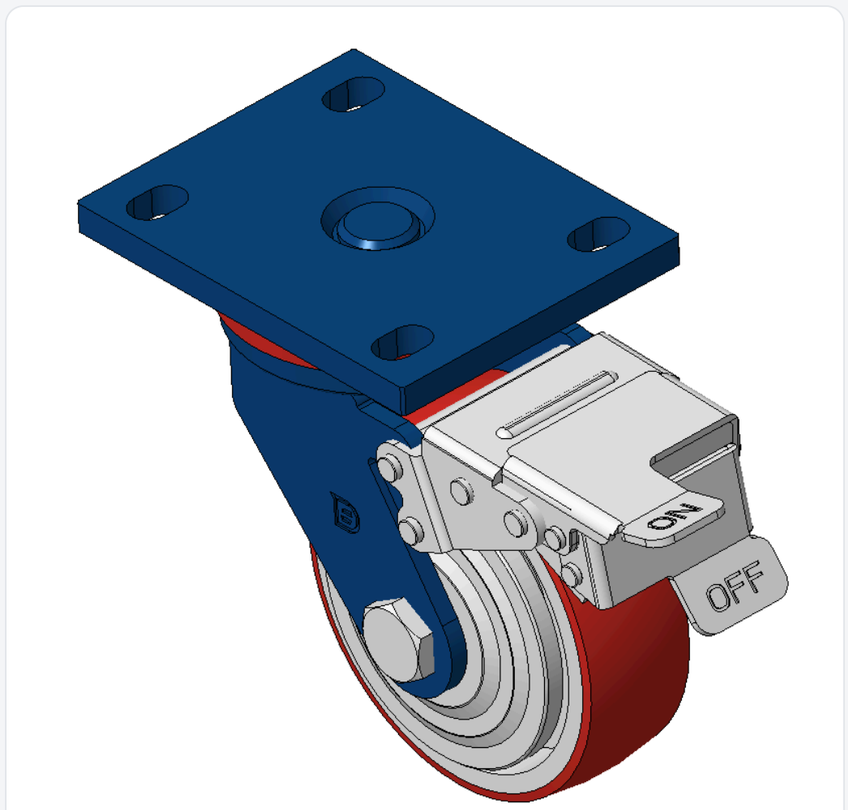

Picture may differ from original product



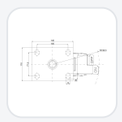

1102 B Type Caster Series

PU (Red round) Wheel Diameter × Wheel Width 125 x 40mm

KS-11020500334131 Copy model no.

Wheel Diameter	Load Capacity (Dynamic)	Overall Height	Wheel Bearing
125mm	340kgs	170mm	Wheels With Ball Bearings

- Equipped with front brake, locking Casters, Welded Caster Fork.
- Blue painted finish, Mounting Type - Top Plate, 105x77.5mm Bolt Hole Spacing.
- Cast Iron Wheel Center, High Quality Polyurethane Wheel Tread, Cast Iron red.
- Bearings—Ball Bearings.
- Wheel tread: High-quality polyurethane wheel tread
- Wheel Center: Iron core/Cast iron core

Product descriptions are for reference only. The actual product shall prevail.

Product Data Sheet | 3D Drawing Request

3D drawings are for members only. Please log in to download.

Product Data Sheet

Metric | Imperial

Wheel Diameter	125mm	Wheel Width	40mm
Wheel Bearing	Wheels With Ball Bearings	Plate Size	140 x 110mm
Bolt Hole Spacing	105 x 77.5mm	Plate Hole	20 x 13mm
Offset	45mm	Swivel Interference	317mm
Overall Height	170mm	Swivel Radius	158.5mm
Hardness Of Tread	93±5° Shore A	Load Capacity (Dynamic)	340kgs
Load Capacity (Static)	510kgs	Temperature	-20°C to +70°C
Fork Type	Swivel Caster With Wheel Brake	Stainless	N/A
Electrical Conductivity	N/A	Anti-Static	N/A
Weight	4.48kgs	Standard	ISO22883

* For any deviation between metric and imperial spec, please refer to the metric spec.

Performance

Rolling Smoothness
Max. 5 points Score: 3

Quiet Operation
Max. 5 points Score: 4

Floor Surface Preservation
Max. 5 points Score: 4

Downloads

PDF **1102-EN-KS2026111911.pdf**
Product Data Sheet

3D **1102-CN-KS2026111911-d261119144935.rar**
3D drawings are for members only. Please log in to download.

Related Products

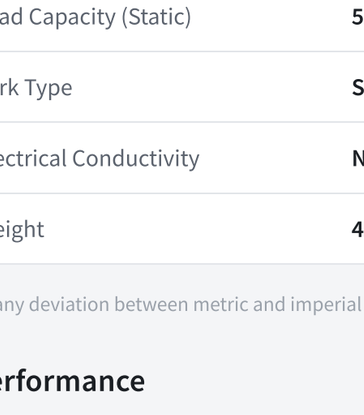

1102 B Type Caster Series
PU (Red round) Wheel Diameter × Wheel Width 125 x 40mm
KS-11020500331131

wheel diameter	dynamic load	overall height
125 mm	340 kg	170 mm

View specs →

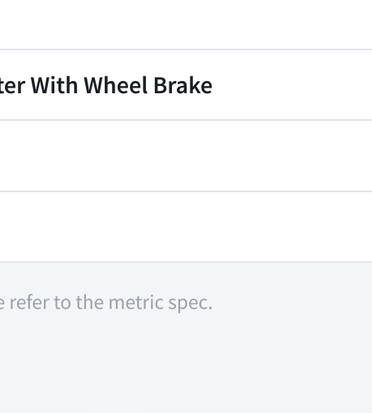

1102 B Type Caster Series
PU (Red round) Wheel Diameter × Wheel Width 125 x 40mm
KS-11020500331141

wheel diameter	dynamic load	overall height
125 mm	340 kg	170 mm

View specs →

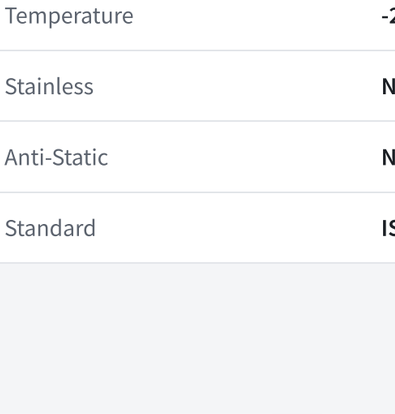

1102 B Type Caster Series
PU (Red round) Wheel Diameter × Wheel Width 125 x 40mm
KS-11020500332131

wheel diameter	dynamic load	overall height
125 mm	340 kg	170 mm

View specs →

1102 B Type Caster Series
PU (Red round) Wheel Diameter × Wheel Width 125 x 40mm
KS-11020500332141

wheel diameter	dynamic load	overall height
125 mm	340 kg	170 mm

View specs →