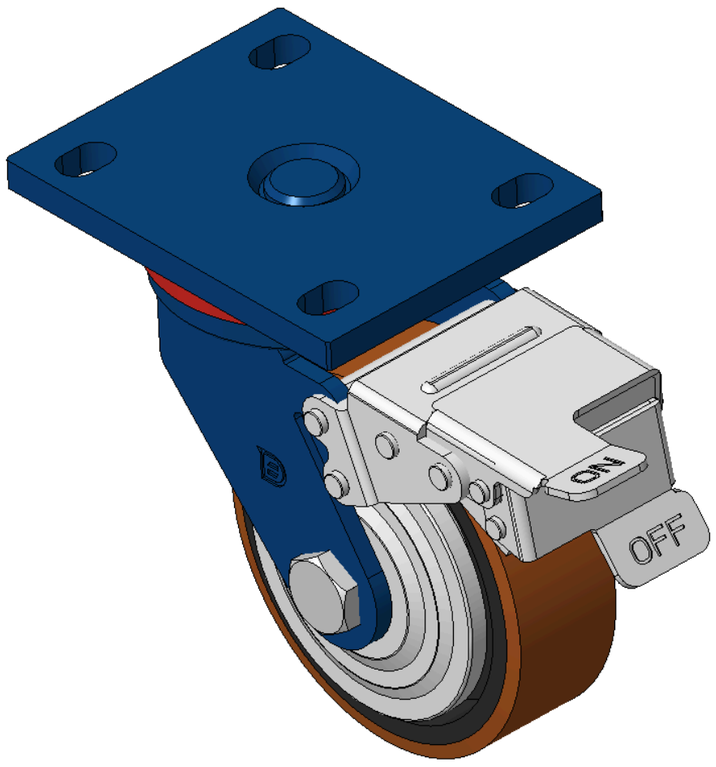

Picture may differ from original product


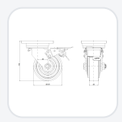
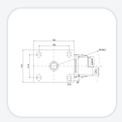

1102 B Type Caster Series

QPU (brown flat) Wheel Diameter x Wheel Width 125 x 40mm

KS-11020500534091 Copy model no.

Wheel Diameter	Load Capacity (Dynamic)	Overall Height	Wheel Bearing
125mm	340kgs	170mm	Wheels With Ball Bearings

- Front-brake Casters, Welded Caster Fork
- Blue paint finish, plate Mounting Type, 105x77.5mm Bolt Hole Spacing
- Cast Iron wheel center, High-Quality, high-elasticity rubber Wheel Tread, Cast Iron brown
- Bearings—Ball Bearings
- Wheel Tread: Hhigh-Quality Polyurethane
- Wheel Center: Iron core / Cast iron core

Product descriptions are for reference only. The actual product shall prevail.

Product Data Sheet | 3D Drawing Request

3D drawings are for members only. Please log in to download.

Product Data Sheet

Metric | Imperial

Wheel Diameter	125mm	Wheel Width	40mm
Wheel Bearing	Wheels With Ball Bearings	Plate Size	140 x 110mm
Bolt Hole Spacing	105 x 77.5mm	Plate Hole	20 x 13mm
Offset	45mm	Swivel Interference	317mm
Overall Height	170mm	Swivel Radius	158.5mm
Hardness Of Tread	92±5° Shore A	Load Capacity (Dynamic)	340kgs
Load Capacity (Static)	510kgs	Temperature	-20°C to +70°C
Fork Type	Swivel Caster With Wheel Brake	Stainless	N/A
Electrical Conductivity	N/A	Anti-Static	N/A
Weight	4.48kgs	Standard	ISO22883

* For any deviation between metric and imperial spec, please refer to the metric spec.

Performance

Rolling Smoothness
Max. 5 points Score: 5

Quiet Operation
Max. 5 points Score: 5

Floor Surface Preservation
Max. 5 points Score: 5

Downloads

PDF **1102-EN-KS2026112008.pdf**
Product Data Sheet

3D **1102-CN-KS2026112008-d261120101844.rar**
3D drawings are for members only. Please log in to download.

Related Products

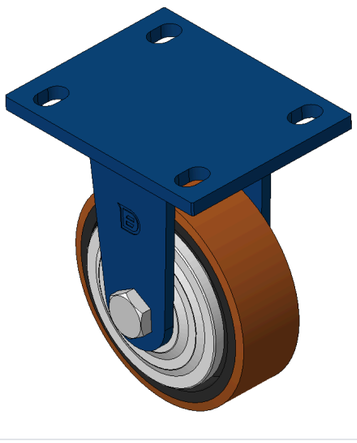

1102 B Type Caster Series

QPU (brown flat) Wheel Diameter x Wheel Width 125 x 40mm

KS-11020500531081

wheel diameter	dynamic load	overall height
125 mm	340 kg	170 mm

View specs →

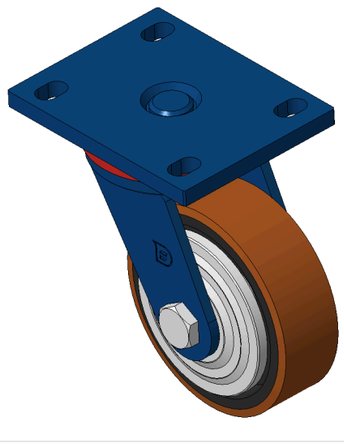

1102 B Type Caster Series

QPU (brown flat) Wheel Diameter x Wheel Width 125 x 40mm

KS-11020500532081

wheel diameter	dynamic load	overall height
125 mm	340 kg	170 mm

View specs →

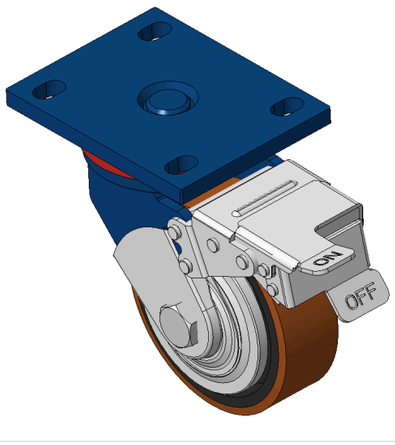

1102 B Type Caster Series

QPU (brown flat) Wheel Diameter x Wheel Width 125 x 40mm

KS-11020500534021

wheel diameter	dynamic load	overall height
125 mm	340 kg	170 mm

View specs →