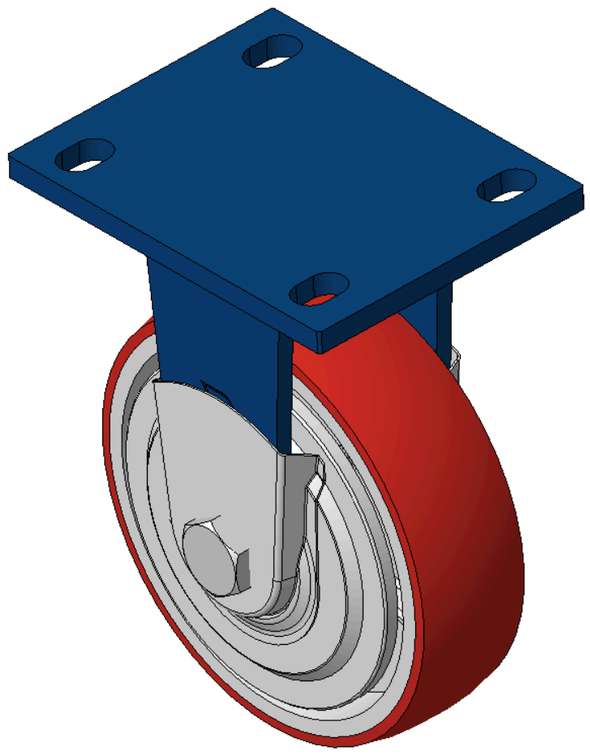

Picture may differ from original product



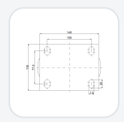

1102 B Type Caster Series

PU (red round) Wheel Diameter x Wheel Width 150x 42mm

KS-11020600331211 Copy model no.

Wheel Diameter	Load Capacity (Dynamic)	Overall Height	Wheel Bearing
150mm	400kgs	197mm	Wheels With Ball Bearings

- Rigid Casters, Welded Caster Fork
- Blue painted finish, Mounting Type - Top Plate, 105x77.5mm Bolt Hole Spacing
- Cast Iron Wheel Center, High Quality Polyurethane Wheel Tread, Cast Iron red
- Ball Bearing bearings with special anti-winding caps
- Wheel Tread: Hhigh-Quality Polyurethane
- Wheel Center: iron core/cast iron

Product descriptions are for reference only. The actual product shall prevail.

3D Drawing Request

3D drawings are for members only. Please log in to download.

Product Data Sheet

Metric | Imperial

Wheel Diameter	**150mm**	Wheel Width	**42mm**
Wheel Bearing	**Wheels With Ball Bearings**	Plate Size	**140 x 110mm**
Bolt Hole Spacing	**105 x 77.5mm**	Plate Hole	**20 x 13mm**
Overall Height	**197mm**	Hardness Of Tread	**92±5° Shore A**
Load Capacity (Dynamic)	**400kgs**	Load Capacity (Static)	**600kgs**
Temperature	**-20°C to +70°C**	Fork Type	**Rigid Caster**
Stainless	**N/A**	Electrical Conductivity	**N/A**
Anti-Static	**N/A**	Weight	**3.58kgs**
Standard	**ISO22883**		

* For any deviation between metric and imperial spec, please refer to the metric spec.

Performance

Rolling Smoothness
Max. 5 points Score: 3

Quiet Operation
Max. 5 points Score: 4

Floor Surface Preservation
Max. 5 points Score: 4

Downloads

3D **1102-CN-KS2026112015-d261120140933.rar**
3D drawings are for members only. Please log in to download. ›

Related Products

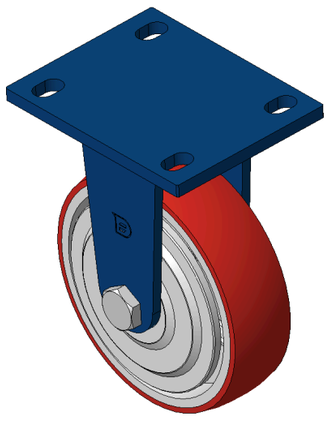

1102 B Type Caster Series

PU (red round) Wheel Diameter x Wheel Width 150x 42mm

KS-11020600331181

wheel diameter	dynamic load	overall height
150 mm	400 kg	197 mm

View specs →