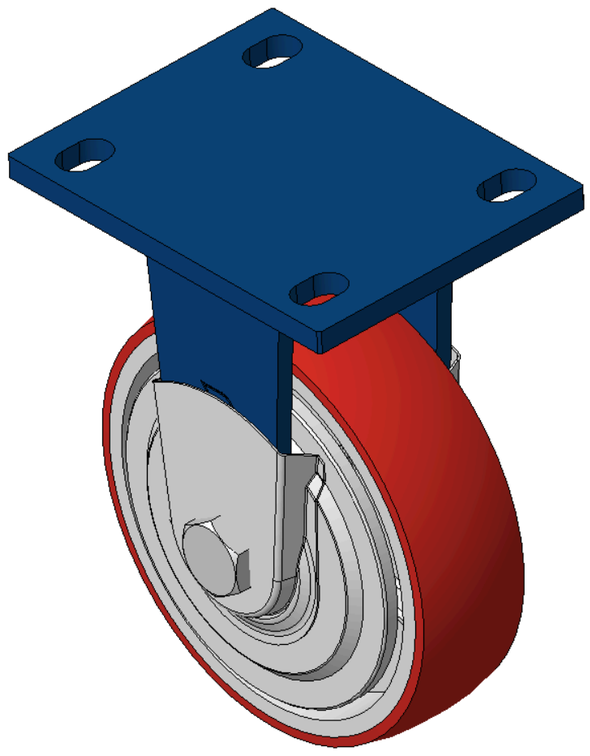

Picture may differ from original product



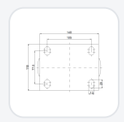

1102 B Type Caster Series

PU (red round) Wheel Diameter x Wheel Width 150x 42mm

KS-11020600331211 Copy model no.

Wheel Diameter	Load Capacity (Dynamic)	Overall Height	Wheel Bearing
150mm	400kgs	197mm	Wheels With Ball Bearings

- Rigid Casters, Welded Caster Fork
- Blue painted finish, Mounting Type - Top Plate, 105x77.5mm Bolt Hole Spacing
- Cast Iron Wheel Center, High Quality Polyurethane Wheel Tread, Cast Iron red
- Ball Bearing bearings with special anti-winding caps
- Wheel Tread: Hhigh-Quality Polyurethane
- Wheel Center: iron core/cast iron

Product descriptions are for reference only. The actual product shall prevail.

Product Data Sheet | 3D Drawing Request

3D drawings are for members only. Please log in to download.

Product Data Sheet

Metric | Imperial

Wheel Diameter	**150mm**	Wheel Width	**42mm**
Wheel Bearing	**Wheels With Ball Bearings**	Plate Size	**140 x 110mm**
Bolt Hole Spacing	**105 x 77.5mm**	Plate Hole	**20 x 13mm**
Overall Height	**197mm**	Hardness Of Tread	**92±5° Shore A**
Load Capacity (Dynamic)	**400kgs**	Load Capacity (Static)	**600kgs**
Temperature	**-20°C to +70°C**	Fork Type	**Rigid Caster**
Stainless	**N/A**	Electrical Conductivity	**N/A**
Anti-Static	**N/A**	Weight	**3.58kgs**
Standard	**ISO22883**		

* For any deviation between metric and imperial spec, please refer to the metric spec.

Performance

Rolling Smoothness
Max. 5 points Score: 3

Quiet Operation
Max. 5 points Score: 4

Floor Surface Preservation
Max. 5 points Score: 4

Downloads

PDF **1102-EN-KS2026112015.pdf**
Product Data Sheet

3D **1102-CN-KS2026112015-d261120140933.rar**
3D drawings are for members only. Please log in to download.

Related Products

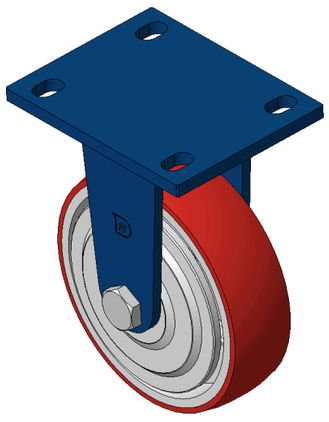

1102 B Type Caster Series

PU (red round) Wheel Diameter x Wheel Width 150x 42mm

KS-11020600331181

wheel diameter	dynamic load	overall height
150 mm	400 kg	197 mm

View specs →