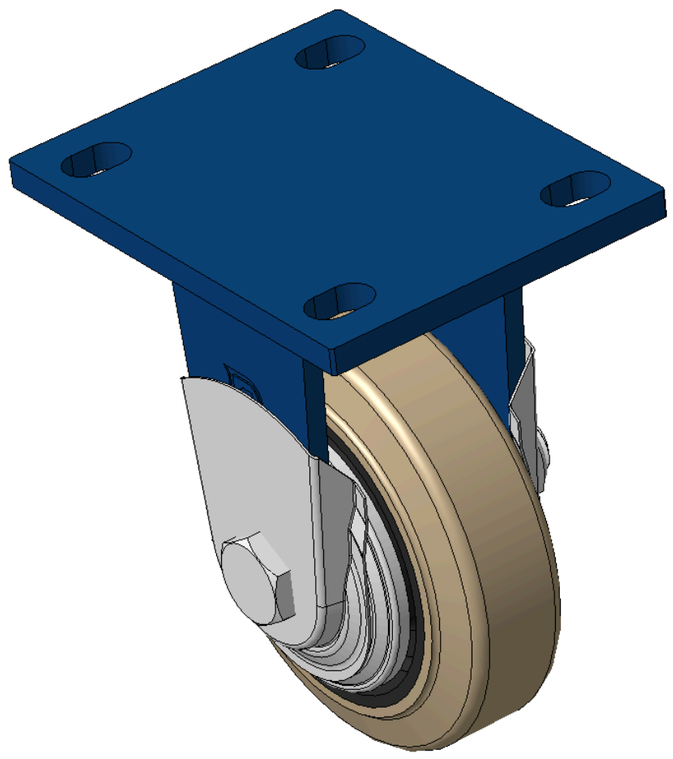

Picture may differ from original product



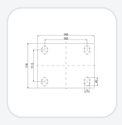

1102 B Type Caster Series

Non-marking NBR Rubber (milling) Wheel Diameter x Wheel Width 125 x 40mm

KS-11020500041061 Copy model no.

Wheel Diameter	Load Capacity (Dynamic)	Overall Height	Wheel Bearing
125mm	200kgs	170mm	Wheels With Ball Bearings

- Rigid Casters, Welded Caster Fork
- Blue painted finish, Mounting Type - Top Plate, 105x77.5mm Bolt Hole Spacing
- Cast Iron Wheel Center, High-Quality, high-elasticity rubber Wheel Tread, Cast Iron to original color
- Bearings—Ball Bearings, equipped with a special anti-winding wheel cover
- Wheel surface: Made of high-quality, high-elasticity rubber
- Wheel Center: Iron core / Cast iron core

Product descriptions are for reference only. The actual product shall prevail.

3D Drawing Request

3D drawings are for members only. Please log in to download.

Product Data Sheet

Metric | Imperial

Wheel Diameter	125mm	Wheel Width	40mm
Wheel Bearing	Wheels With Ball Bearings	Plate Size	140 x 110mm
Bolt Hole Spacing	105 x 77.5mm	Plate Hole	20 x 13mm
Overall Height	170mm	Hardness Of Tread	85±5° Shore A
Load Capacity (Dynamic)	200kgs	Load Capacity (Static)	300kgs
Temperature	-20°C to +80°C	Fork Type	Rigid Caster
Stainless	N/A	Electrical Conductivity	N/A
Anti-Static	N/A	Weight	2.25kgs
Standard	ISO22883		

* For any deviation between metric and imperial spec, please refer to the metric spec.

Performance

Rolling Smoothness
Max. 5 points Score: 3

Quiet Operation
Max. 5 points Score: 4

Floor Surface Preservation
Max. 5 points Score: 4

Downloads

3D **1102-CN-KS2026112302-d261123091618.rar**
3D drawings are for members only. Please log in to download. ›

Related Products

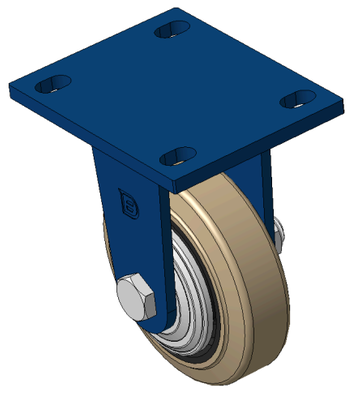

1102 B Type Caster Series

Non-marking NBR Rubber (milling) Wheel Diameter x Wheel Width 12…

KS-11020500041051

wheel diameter	dynamic load	overall height
100 mm	200 kg	170 mm

View specs →