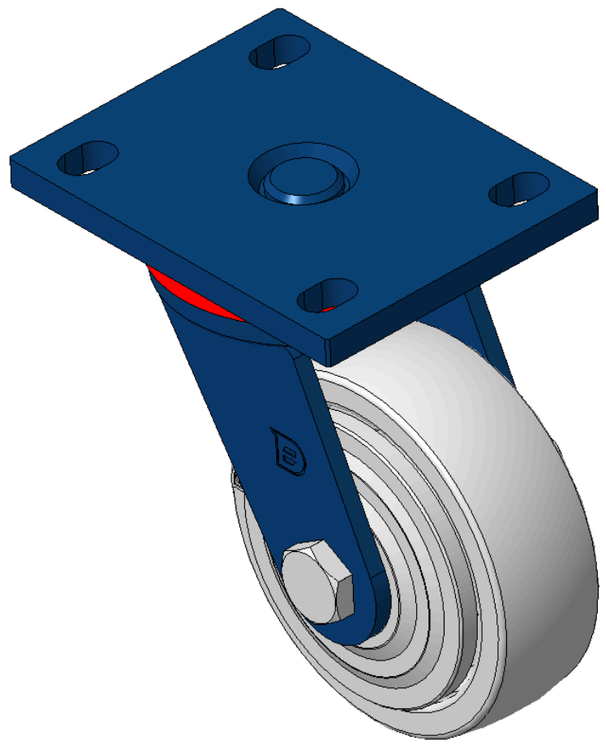

Picture may differ from original product



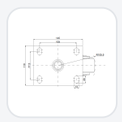

1102 B Type Caster Series

MRC (Transparent) Wheel Diameter × Wheel Width 125 x 40mm

KS-11020500072041 Copy model no.

Wheel Diameter	Load Capacity (Dynamic)	Overall Height	Wheel Bearing
125mm	200kgs	170mm	Wheels With Ball Bearings

- Modible Casters, Welded Caster Fork
- Blue painted finish, Mounting Type - Top Plate device, Bolt Hole Spacing 105x77.5
- Cast Iron Wheel Center, High-Quality, high-elasticity rubber Wheel Tread
- Bearings—Ball Bearings
- Wheel surface: Made of high-quality, high-elasticity rubber
- Wheel Center: Iron core/Cast iron core

Product descriptions are for reference only. The actual product shall prevail.

3D Drawing Request

3D drawings are for members only. Please log in to download.

Product Data Sheet

Metric | Imperial

Wheel Diameter	125mm	Wheel Width	40mm
Wheel Bearing	Wheels With Ball Bearings	Plate Size	140 x 110mm
Bolt Hole Spacing	105 x 77.5mm	Plate Hole	20 x 13mm
Offset	42mm	Swivel Interference	211mm
Overall Height	170mm	Swivel Radius	105.5mm
Hardness Of Tread	75±5° Shore D	Load Capacity (Dynamic)	200kgs
Load Capacity (Static)	300kgs	Temperature	-20°C to +80°C
Fork Type	Swivel Caster	Stainless	N/A
Electrical Conductivity	N/A	Anti-Static	N/A
Weight	2.75kgs	Standard	ISO22883

* For any deviation between metric and imperial spec, please refer to the metric spec.

Performance

Rolling Smoothness
Max. 5 points Score: 5

Quiet Operation
Max. 5 points Score: 2

Floor Surface Preservation
Max. 5 points Score: 2

Downloads

3D **1102-CN-KS2026112310-d261123135709.rar**
3D drawings are for members only. Please log in to download. ›

Related Products

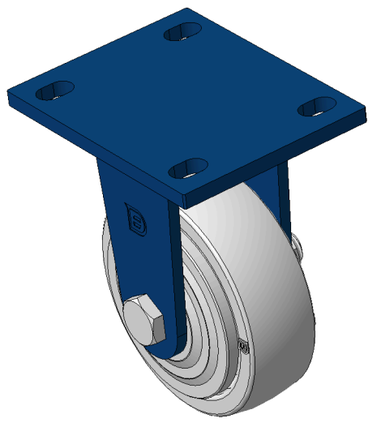

1102 B Type Caster Series

MRC (Transparent) Wheel Diameter × Wheel Width 125 x 40mm

KS-11020500071061

wheel diameter	dynamic load	overall height
125 mm	300 kg	170 mm

View specs →

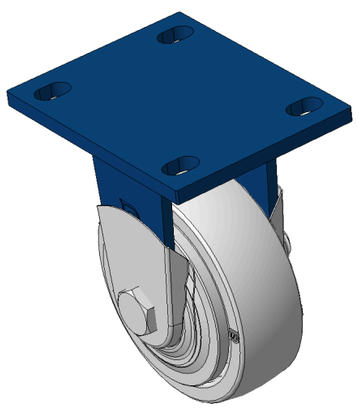

1102 B Type Caster Series

MRC (Transparent) Wheel Diameter × Wheel Width 125 x 40mm

KS-11020500071071

wheel diameter	dynamic load	overall height
125 mm	300 kg	170 mm

View specs →