Choose another country or region to see content specific to your location.
United States & Other Regions
Continue

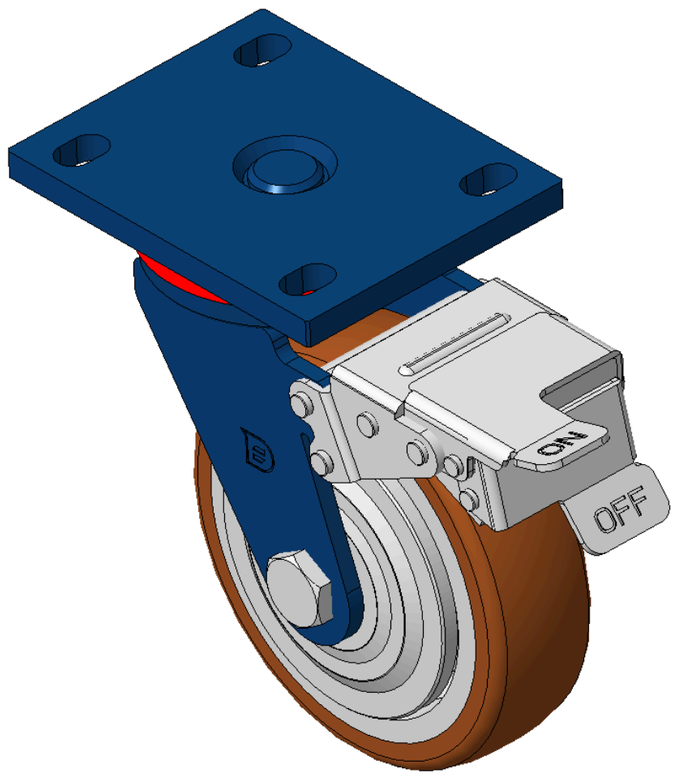

Picture may differ from original product



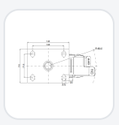

1102 B Type Caster Series

QPU (Brown round) Wheel Diameter × Wheel Width 150 x 42mm

KS-11020600534141 Copy model no.

Wheel Diameter	Load Capacity per Wheel (Dynamic)	Overall Height	Wheel Bearing
150mm	**335kgs**	**197mm**	**Wheels With Ball Bearings**

- Equipped with front brake, With locking system Casters, Welded Caster Fork
- Blue painted finish, Mounting Type - Top Plate Bolt Hole Spacing—105x77.5
- Cast Iron Wheel Center, High Quality Polyurethane Wheel Tread
- Bearings—Ball Bearings
- Wheel Tread: Hhigh-Quality Polyurethane
- Wheel Center: Iron core / Cast iron core

Product descriptions are for reference only. The actual product shall prevail.

Product Data Sheet | 3D Drawing Request

3D drawings are for members only. Please log in to download.

Product Data Sheet

Metric | Imperial

Wheel Diameter	**150mm**	Wheel Width	**42mm**
Wheel Bearing	**Wheels With Ball Bearings**	Plate Size	**140 x 110mm**
Bolt Hole Spacing	**105 x 77.5mm**	Plate Hole	**20 x 13mm**
Offset	**42mm**	Swivel Interference	**321mm**
Overall Height	**197mm**	Swivel Radius	**160.5mm**
Hardness Of Tread	**92±5° Shore A**	Load Capacity per Wheel (Dynamic)	**335kgs**
Load Capacity per Wheel (Static)	**502.5kgs**	Temperature	**-20°C to +70°C**
Fork Type	**Swivel Caster With Front Brake**	Stainless	**N/A**
Electrical Conductivity	**N/A**	Anti-Static	**N/A**
Weight	**3.17kgs**	Standard	**ISO22883**

* For any deviation between metric and imperial spec, please refer to the metric spec.

Performance

Rolling Smoothness
Max. 5 points Score: 5

Quiet Operation
Max. 5 points Score: 5

Floor Surface Preservation
Max. 5 points Score: 5

Downloads

PDF **1102-EN-KS2026112511.pdf**
Product Data Sheet

3D **1102-CN-KS2026112511-d261125162008.rar**
3D drawings are for members only. Please log in to download.

Related Products

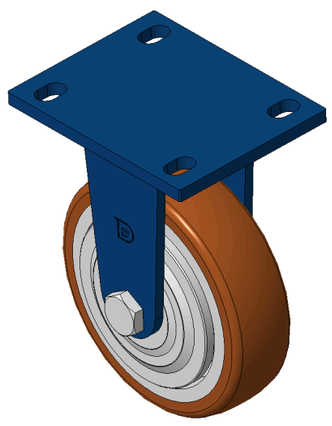

1102 B Type Caster Series
QPU (Brown round) Wheel Diameter × Wheel Width 150 x 42mm
KS-11020600531121

wheel diameter	dynamic load	overall height
150 mm	335 kg	197 mm

View specs →

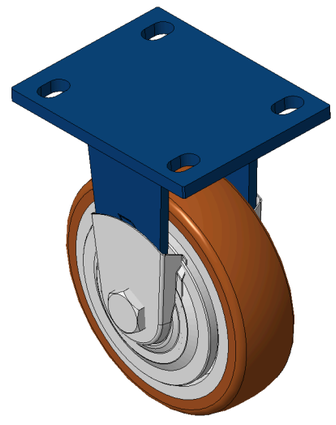

1102 B Type Caster Series
QPU (Brown round) Wheel Diameter × Wheel Width 150 x 42mm
KS-11020600531131

wheel diameter	dynamic load	overall height
150 mm	335 kg	197 mm

View specs →

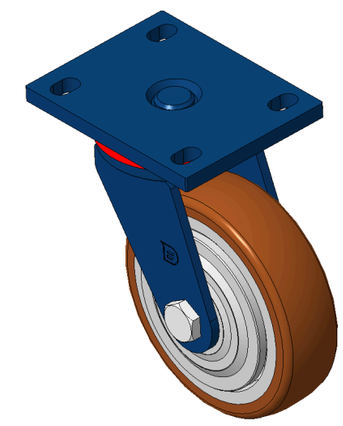

1102 B Type Caster Series
QPU (Brown round) Wheel Diameter × Wheel Width 150 x 42mm
KS-11020600532141

wheel diameter	dynamic load	overall height
150 mm	335 kg	197 mm

View specs →

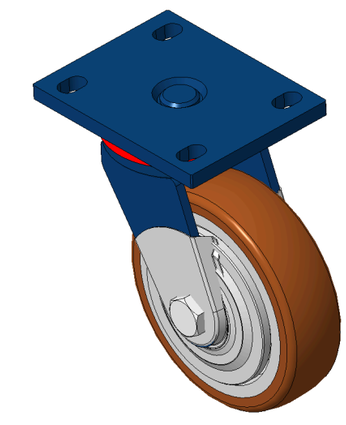

1102 B Type Caster Series
QPU (Brown round) Wheel Diameter × Wheel Width 150 x 42mm
KS-11020600532161

wheel diameter	dynamic load	overall height
150 mm	335 kg	197 mm

View specs →