Choose another country or region to see content specific to your location.
United States & Other Regions
Continue

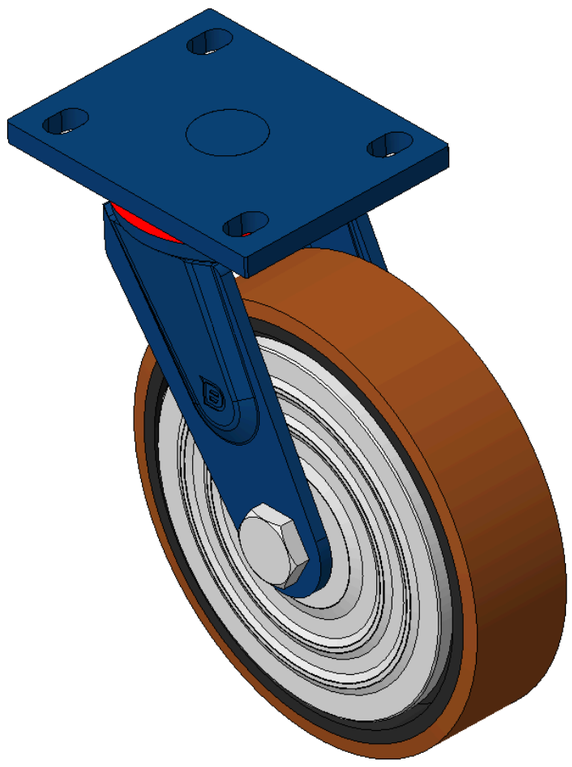

Picture may differ from original product



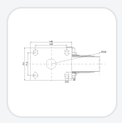

1102 B Type Caster Series

QPU (Brown Flat) Wheel Diameter x Wheel Width 200 x 50mm

KS-11020800532041 Copy model no.

Wheel Diameter	Load Capacity per Wheel (Dynamic)	Overall Height	Wheel Bearing
200mm	450kgs	248mm	Wheels With Ball Bearings

- Modible Casters, Welded Caster Fork
- Blue painted finish, plate Mounting Type, 105x77.5mm Bolt Hole Spacing
- Cast Iron Wheel Center, High Quality Polyurethane Wheel Tread, Cast Iron brown
- Bearings—Ball Bearings
- Wheel Tread: Hhigh-Quality Polyurethane
- Wheel Center: Iron core / Cast iron core

Product descriptions are for reference only. The actual product shall prevail.

3D Drawing Request

3D drawings are for members only. Please log in to download.

Product Data Sheet

Metric | Imperial

Wheel Diameter	**200mm**	Wheel Width	**50mm**
Wheel Bearing	**Wheels With Ball Bearings**	Plate Size	**140 x 110mm**
Bolt Hole Spacing	**105 x 77.5mm**	Plate Hole	**20 x 13mm**
Offset	**62mm**	Swivel Interference	**330mm**
Overall Height	**248mm**	Swivel Radius	**165mm**
Hardness Of Tread	**° Shore A**	Load Capacity per Wheel (Dynamic)	**450kgs**
Load Capacity per Wheel (Static)	**675kgs**	Temperature	
Fork Type	**Swivel Caster**	Stainless	**N/A**
Electrical Conductivity	**N/A**	Anti-Static	**N/A**
Weight	**6.4kgs**	Standard	**ISO22883**

* For any deviation between metric and imperial spec, please refer to the metric spec.

Performance

Rolling Smoothness
Max. 5 points Score: 3

Quiet Operation
Max. 5 points Score: 4

Floor Surface Preservation
Max. 5 points Score: 4

Downloads

3D **1102-CN-KS2026112621-d261126140756.rar**
3D drawings are for members only. Please log in to download. ›

Related Products

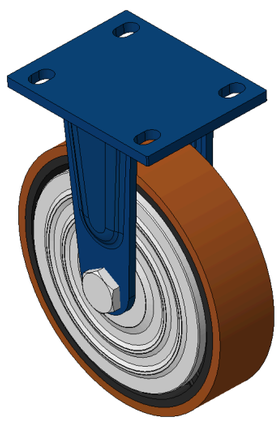

1102 B Type Caster Series

KS-11020800531041 QPU (Brown Flat) Wheel Diameter x Wheel Width 20···

wheel diameter	dynamic load	overall height
200 mm	450 kg	248 mm

View specs →

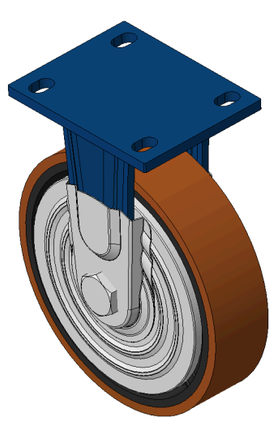

1102 B Type Caster Series

KS-11020800531071 QPU (Brown Flat) Wheel Diameter x Wheel Width 20···

wheel diameter	dynamic load	overall height
200 mm	450 kg	248 mm

View specs →