Choose another country or region to see content specific to your location.
United States & Other Regions
Continue

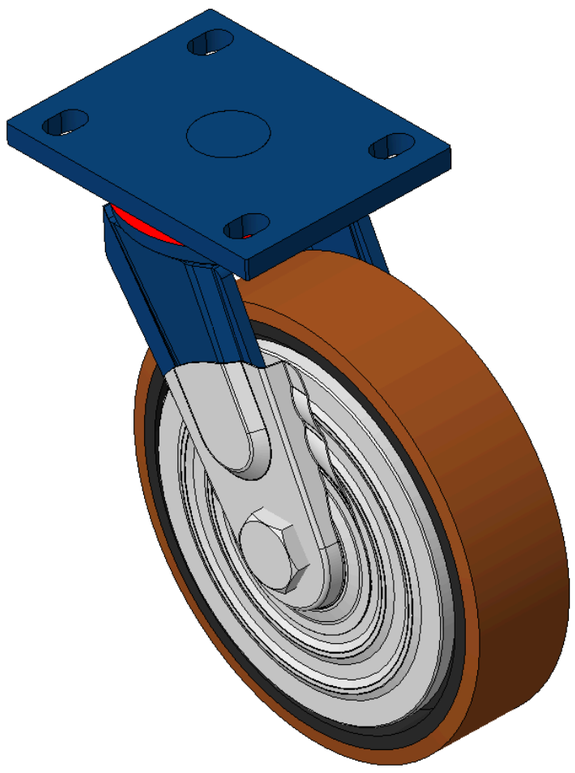

Picture may differ from original product



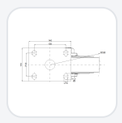

1102 B Type Caster Series

QPU (Brown Flat) Wheel Diameter x Wheel Width 200 x 50mm

KS-11020800532071 Copy model no.

Wheel Diameter	Load Capacity per Wheel (Dynamic)	Overall Height	Wheel Bearing
200mm	450kgs	248mm	Wheels With Ball Bearings

- Modible Casters, Welded Caster Fork
- Blue painted finish, plate Mounting Type, 105x77.5mm Bolt Hole Spacing
- Cast Iron Wheel Center, High Quality Polyurethane Wheel Tread, Cast Iron brown
- Bearings—Ball Bearings, equipped with a special anti-winding wheel cover
- Wheel Tread: Hhigh-Quality Polyurethane
- Wheel Center: Iron core / Cast iron core

Product descriptions are for reference only. The actual product shall prevail.

Product Data Sheet | 3D Drawing Request

3D drawings are for members only. Please log in to download.

Product Data Sheet

Metric | Imperial

Wheel Diameter	200mm	Wheel Width	50mm
Wheel Bearing	Wheels With Ball Bearings	Plate Size	140 x 110mm
Bolt Hole Spacing	105 x 77.5mm	Plate Hole	20 x 13mm
Offset	62mm	Swivel Interference	330mm
Overall Height	248mm	Swivel Radius	165mm
Hardness Of Tread	° Shore A	Load Capacity per Wheel (Dynamic)	450kgs
Load Capacity per Wheel (Static)	675kgs	Temperature	
Fork Type	Swivel Caster	Stainless	N/A
Electrical Conductivity	N/A	Anti-Static	N/A
Weight	6.4kgs	Standard	ISO22883

* For any deviation between metric and imperial spec, please refer to the metric spec.

Performance

Rolling Smoothness
Max. 5 points Score: 3

Quiet Operation
Max. 5 points Score: 4

Floor Surface Preservation
Max. 5 points Score: 4

Downloads

PDF **1102-EN-KS2026112622.pdf**
Product Data Sheet

3D **1102-CN-KS2026112622-d261126141315.rar**
3D drawings are for members only. Please log in to download.

Related Products

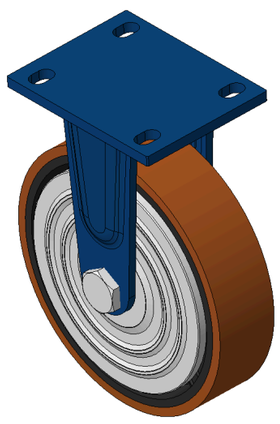

1102 B Type Caster Series
KS-11020800531041 QPU (Brown Flat) Wheel Diameter x Wheel Width 20···

wheel diameter	dynamic load	overall height
200 mm	450 kg	248 mm

View specs →

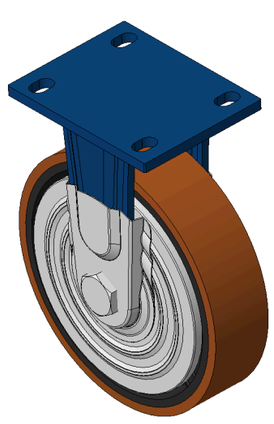

1102 B Type Caster Series
KS-11020800531071 QPU (Brown Flat) Wheel Diameter x Wheel Width 20···

wheel diameter	dynamic load	overall height
200 mm	450 kg	248 mm

View specs →

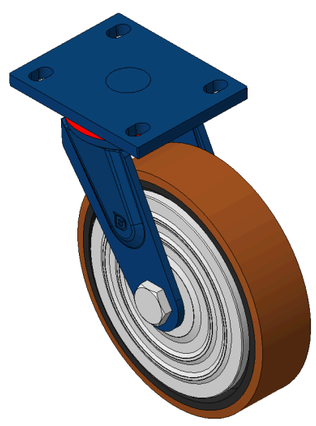

1102 B Type Caster Series
KS-11020800532041 QPU (Brown Flat) Wheel Diameter x Wheel Width 20···

wheel diameter	dynamic load	overall height
200 mm	450 kg	248 mm

View specs →