Choose another country or region to see content specific to your location.
United States & Other Regions
Continue

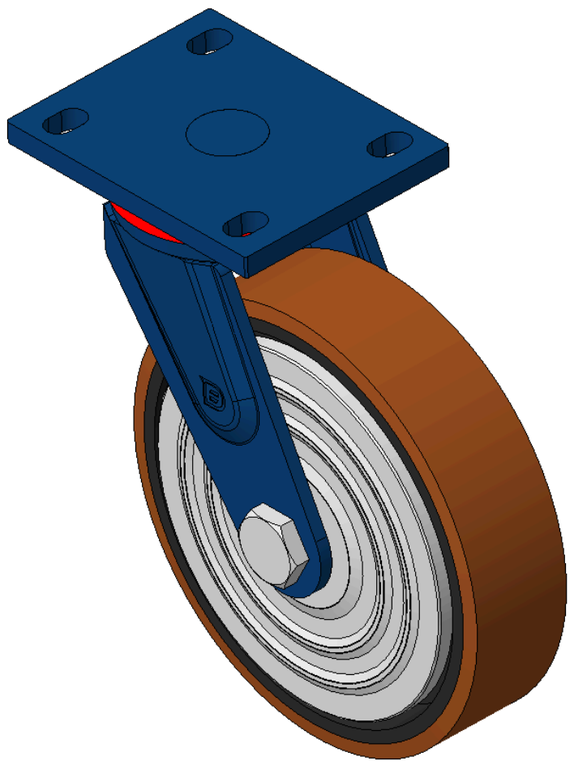

Picture may differ from original product



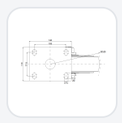

1102 B Type Caster Series

QPU (brown round) Wheel Diameter x Wheel Width 200 x 50mm

KS-11020800532131 Copy model no.

Wheel Diameter	Load Capacity per Wheel (Dynamic)	Overall Height	Wheel Bearing
200mm	450kgs	248mm	Wheels With Ball Bearings

- Modible Casters, Welded Caster Fork
- Blue painted finish, plate Mounting Type, 105x77.5mm Bolt Hole Spacing
- Cast Iron Wheel Center, High Quality Polyurethane Wheel Tread, Cast Iron brown
- Bearings—Ball Bearings
- Wheel Tread: Hhigh-Quality Polyurethane
- Wheel Center: Iron core / Cast iron core

Product descriptions are for reference only. The actual product shall prevail.

Product Data Sheet
3D Drawing Request

3D drawings are for members only. Please log in to download.

Product Data Sheet

Metric | Imperial

Wheel Diameter	200mm	Wheel Width	50mm
Wheel Bearing	Wheels With Ball Bearings	Plate Size	140 x 110mm
Bolt Hole Spacing	105 x 77.5mm	Plate Hole	20 x 13mm
Offset	62mm	Swivel Interference	330mm
Overall Height	248mm	Swivel Radius	165mm
Hardness Of Tread	75±5° Shore D	Load Capacity per Wheel (Dynamic)	450kgs
Load Capacity per Wheel (Static)	675kgs	Temperature	
Fork Type	Swivel Caster	Stainless	N/A
Electrical Conductivity	N/A	Anti-Static	N/A
Weight	6.4kgs	Standard	ISO22883

* For any deviation between metric and imperial spec, please refer to the metric spec.

Performance

Rolling Smoothness
Max. 5 points Score: 3

Quiet Operation
Max. 5 points Score: 4

Floor Surface Preservation
Max. 5 points Score: 4

Downloads

PDF **1102-EN-KS2026112623.pdf**
Product Data Sheet

3D **1102-CN-KS2026112623-d261126141933.rar**
3D drawings are for members only. Please log in to download.

Related Products

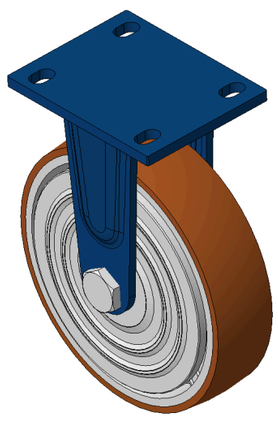

1102 B Type Caster Series

KS-11020800531131 QPU (brown round) Wheel Diameter x Wheel···

wheel diameter	dynamic load	overall height
200 mm	450 kg	248 mm

View specs →

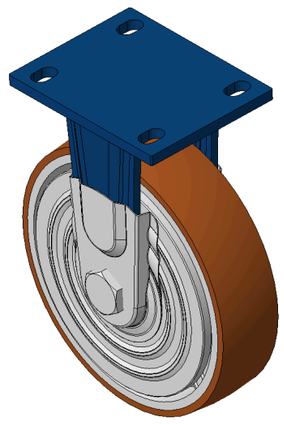

1102 B Type Caster Series

KS-11020800531171 QPU (brown round) Wheel Diameter x Wheel···

wheel diameter	dynamic load	overall height
200 mm	450 kg	248 mm

View specs →