Choose another country or region to see content specific to your location.
United States & Other Regions
Continue



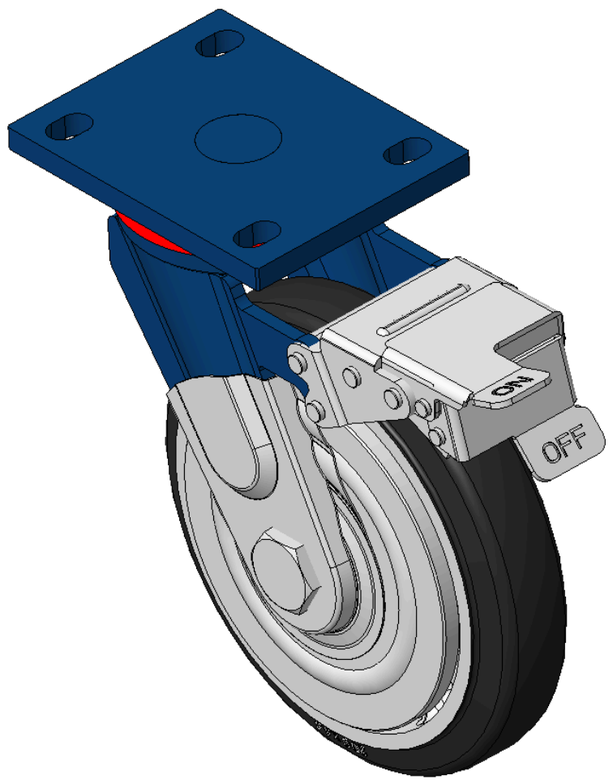


Picture may differ from original product



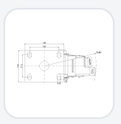

1102 B Type Caster Series

# NBR (milling black) Wheel Diameter x Wheel Width 200 x 44mm

KS-11020800044051 Copy model no.

| Wheel Diameter | Load Capacity per Wheel (Dynamic) | Overall Height | Wheel Bearing |
|---|---|---|---|
| 200mm | 350kgs | 248mm | Wheels With Ball Bearings |

- Equipped with front brake, With locking system Casters, Welded Caster Fork
- Blue painted finish, Mounting Type - Top Plate, 105x77.5mm Bolt Hole Spacing
- Cast Iron Wheel Center, High-Quality, high-elasticity rubber rim, Cast Iron black
- Bearings—Ball Bearings
- Wheel surface: Made of high-quality, high-elasticity rubber
- Wheel Center: Iron core / Cast iron core

Product descriptions are for reference only. The actual product shall prevail.

Product Data Sheet
3D Drawing Request

3D drawings are for members only. Please log in to download.

## Product Data Sheet

Metric | Imperial

| | | | |
|---|---|---|---|
| Wheel Diameter | 200mm | Wheel Width | 44mm |
| Wheel Bearing | Wheels With Ball Bearings | Plate Size | 140 x 110mm |
| Bolt Hole Spacing | 105 x 77.5mm | Plate Hole | 20 x 13mm |
| Offset | 62mm | Swivel Interference | 370mm |
| Overall Height | 248mm | Swivel Radius | 185mm |
| Hardness Of Tread | 85±5° Shore A | Load Capacity per Wheel (Dynamic) | 350kgs |
| Load Capacity per Wheel (Static) | 525kgs | Temperature | -20°C to +80°C |
| Fork Type | Swivel Caster With Front Brake | Stainless | N/A |
| Electrical Conductivity | N/A | Anti-Static | N/A |
| Weight | 6.60kgs | Standard | ISO22883 |

* For any deviation between metric and imperial spec, please refer to the metric spec.

## Performance

**Rolling Smoothness**
Max. 5 points Score: 3

**Quiet Operation**
Max. 5 points Score: 4

**Floor Surface Preservation**
Max. 5 points Score: 4

## Downloads

PDF **1102-EN-KS2026112625.pdf**
Product Data Sheet

3D **1102-CN-KS2026112625-d261126165253.rar**
3D drawings are for members only. Please log in to download.

## Related Products

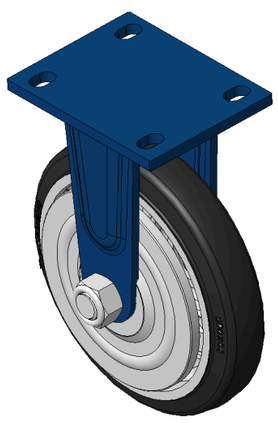

1102 B Type Caster Series

KS-11020800041111 NBR (milling black) Wheel Diameter x Wheel…

| wheel diameter | dynamic load | overall height |
|---|---|---|
| 200 mm | 450 kg | 248 mm |

View specs →

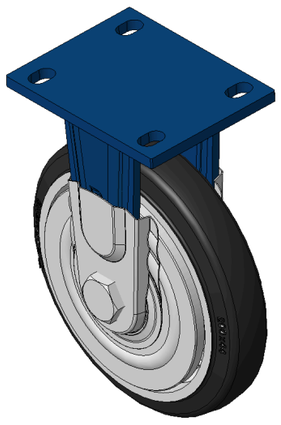

1102 B Type Caster Series

KS-11020800041121 NBR (milling black) Wheel Diameter x Wheel…

| wheel diameter | dynamic load | overall height |
|---|---|---|
| 200 mm | 450 kg | 248 mm |

View specs →

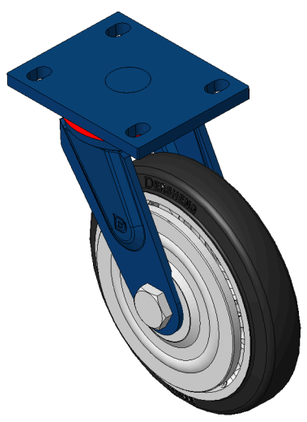

1102 B Type Caster Series

KS-11020800042111 NBR (milling black) Wheel Diameter x Wheel…

| wheel diameter | dynamic load | overall height |
|---|---|---|
| 200 mm | 450 kg | 248 mm |

View specs →

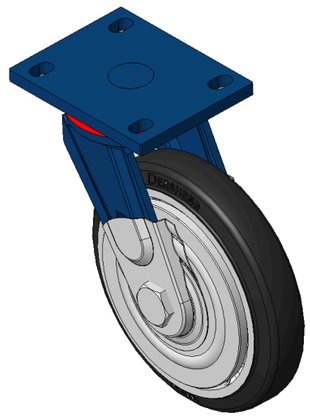

1102 B Type Caster Series

KS-11020800042121 NBR (milling black) Wheel Diameter x Wheel…

| wheel diameter | dynamic load | overall height |
|---|---|---|
| 200 mm | 450 kg | 248 mm |

View specs →