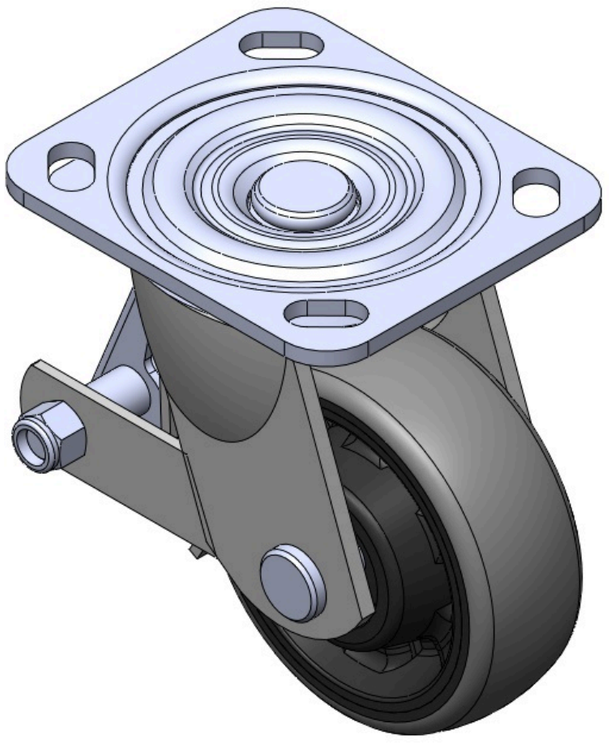

Picture may differ from original product



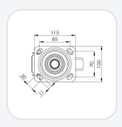

1104-D series

W-type all-purpose wheel (black/dark gray) Wheel diameter × wheel width 100 x 36mm

TW-4110404004009 Copy model no.

Wheel Diameter	Load Capacity (Dynamic)	Overall Height	Wheel Bearing
100mm	140kgs	135mm	Wheels With Ball Bearings

- Equipped with rear brake and locking Casters. Welded Caster Fork. Zine-Plated, plate Mounting Type. Reinforced impact-resistant polypropylene Wheel Center, High-Quality Reinforced Polypropylene Rubber (TPR) wheel rim. Black/grey, Ball Bearings.
- Wheel tread: Thermoplastic rubber elastomer (TPR)
- Wheel Center: Made of high-quality impact-resistant polypropylene

Product descriptions are for reference only. The actual product shall prevail.

Product Data Sheet | 3D Drawing Request

3D drawings are for members only. Please log in to download.

Product Data Sheet

Metric | Imperial

Wheel Diameter	100mm	Wheel Width	36mm
Wheel Bearing	Wheels With Ball Bearings	Plate Size	115 x 100mm
Bolt Hole Spacing	85 x 70mm	Plate Hole	20 x 11mm
Offset	30mm	Swivel Interference	160mm
Overall Height	135mm	Swivel Radius	80mm
Hardness Of Tread	72±5° Shore A	Load Capacity (Dynamic)	140kgs
Load Capacity (Static)	210kgs	Temperature	-20°C to +60°C
Fork Type	Swivel Caster With Rear Brake	Stainless	N/A
Electrical Conductivity	N/A	Anti-Static	N/A
Weight	1.6kgs	Standard	ISO22883

* For any deviation between metric and imperial spec, please refer to the metric spec.

Performance

Rolling Smoothness
Max. 5 points Score: 5

Quiet Operation
Max. 5 points Score: 5

Floor Surface Preservation
Max. 5 points Score: 5

Downloads

PDF **TW-41104040040071.pdf**
Product Data Sheet

3D **4110404004009-7.rar**
3D drawings are for members only. Please log in to download.

Related Products

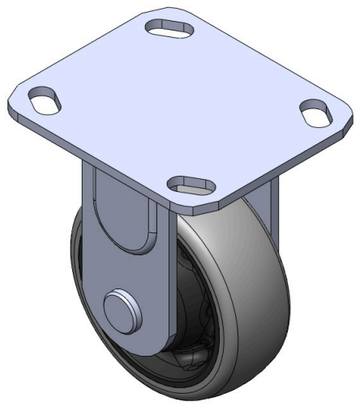

1104-D series

W-type all-purpose wheel (black/dark gray) Wheel diameter ···

TW-4110404001012

wheel diameter	dynamic load	overall height
100 mm	140 kg	135 mm

View specs →

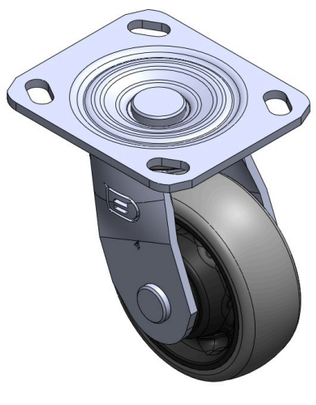

1104-D series

W-type all-purpose wheel (black/dark gray) Wheel diameter ···

TW-4110404002013

wheel diameter	dynamic load	overall height
100 mm	140 kg	135 mm

View specs →