◄ Back | Product Data Sheet (Metric) | Product Data Sheet (Imperial) | 3D image files

Product Information Sheet

# 1124 1-1/2" Wide General Purposes Caster Series

PU (Red Flat) Wheel Diameter × Wheel Width 150 × 42 mm

EAN

YJ-11240600334413

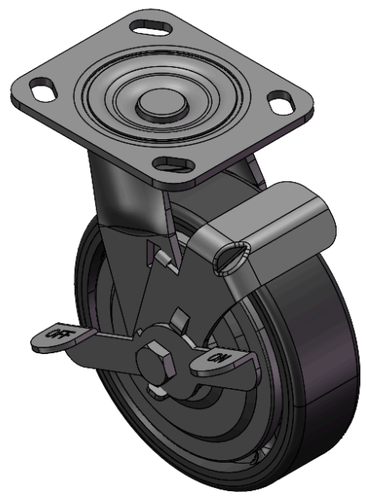

Equipped with Side Brakes and a With locking system for the Casters. Riveted and Stamping Top Plate legs 85 x 70mm (3-3/8" x 2-3/4") Bolt Hole Spacing.
Zine-Plated surface, Top Plate type (4.5T) Mounting Type device.
Cast Iron Wheel Center, High Quality Polyurethane Wheel Tread.
Cast Iron red, Bearing—Ball Bearings.

Wheel Tread: Hhigh-Quality Polyurethane
Wheel Center: cast iron core

Drawings are for reference only and may differ from the product

Picture may differ from original product

## Technical Data

◉ Metric ○ Imperial

| | |
|---|---|
| Wheel Diameter | 150mm |
| Wheel Width | 42mm |
| Wheel Bearing | Wheels With Ball Bearings |
| Plate Size | 115 x 100mm |
| Bolt Hole Spacing | 85 x 70mm |
| Plate Hole | 20 x 11mm |
| Offset | 39mm |
| Swivel Interference | 224mm |
| Overall Height | 189mm |
| Swivel Radius | 112mm |
| Hardness Of Tread | 93±5° Shore A |
| Load Capacity (Dynamic) | 600kgs |
| Load Capacity (Static) | 900kgs |
| Temperature | -20°C to +70°C |
| Fork Type | Swivel Caster With Side Brake |
| Stainless | N/A |
| Electrical Conductivity | N/A |
| Anti-Static | N/A |
| Weight | 3.32kgs |
| Standard | ISO22883 |

## Advantages at a glance

| | |
|---|---|
| Rolling Resistance | ●●●○○ |
| Operating Noise | ●●●●○ |
| Floor Surface Preservation | ●●●●○ |

## Dimensions

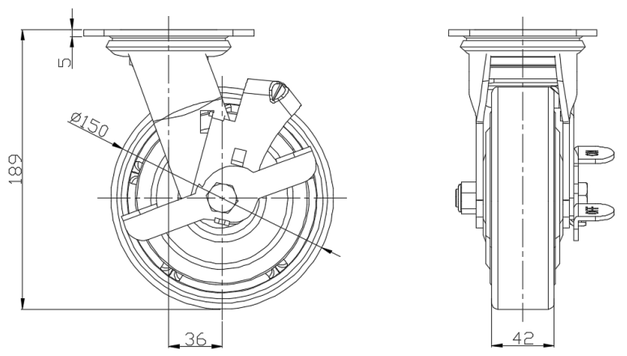


## Mounting

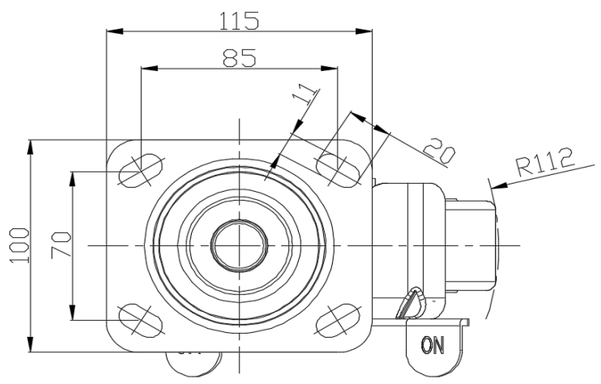


Drawings are for reference only and may differ from the product.

* For any deviation between metric and imperial spec, please refer to the metric spec.

© Copyright 2026 DershengInternational www.dersheng.com

## Related Products