Choose another country or region to see content specific to your location.
United States & Other Regions
Continue





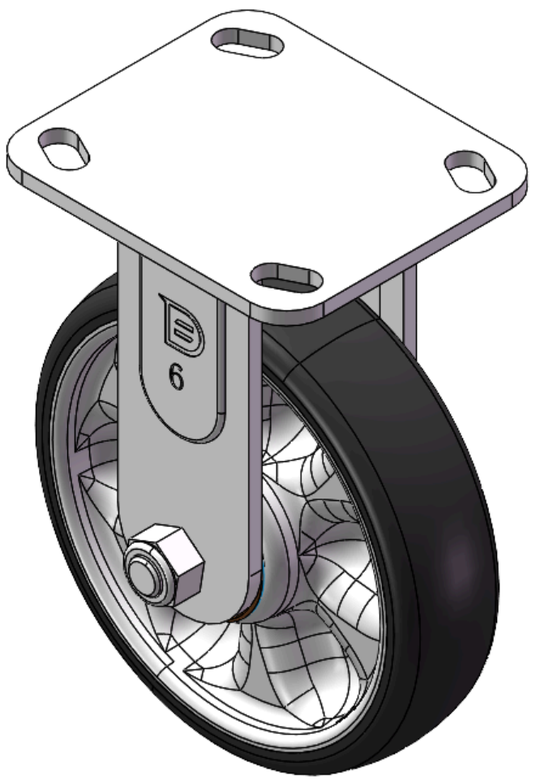

Picture may differ from original product


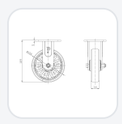
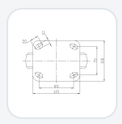

1124 1-1/2" Wide General Purposes Caster Series

# W Resolute (black, dark gray) Wheel Diameter × Wheel Width 150 x 38mm

YJ-11240600451013 Copy model no.

| Wheel Diameter | Load Capacity per Wheel (Dynamic) | Overall Height | Wheel Bearing |
|---|---|---|---|
| 150mm | 204kgs | 189mm | Wheels With Ball Bearings |

- Rigid Casters, Welded Fork—85 x 70mm (3-3/8" x 2-3/4") Bolt Hole Spacing design
- Zine-Plated, Top Plate type (4.5T) Mounting Type device
- Reinforced impact-resistant polypropylene Wheel Center, High-Quality Reinforced Polypropylene Rubber (TPR) Wheel Tread
- Dark gray, Bearing—Ball Bearings.
- Wheel tread: Thermoplastic rubber elastomer (TPR)
- Wheel Center: Made of high-quality impact-resistant polypropylene

Product descriptions are for reference only. The actual product shall prevail.

Product Data Sheet (Metric)
3D Drawing Request

3D drawings are for members only. Please log in to download.

## Product Data Sheet

Metric | Imperial

| | | | |
|---|---|---|---|
| Wheel Diameter | 150mm | Wheel Width | 38mm |
| Wheel Bearing | Wheels With Ball Bearings | Plate Size | 115 x 100mm |
| Bolt Hole Spacing | 85 x 70mm | Plate Hole | 20 x 11mm |
| Overall Height | 189mm | Hardness Of Tread | 72±5° Shore A |
| Load Capacity per Wheel (Dynamic) | 204kgs | Load Capacity per Wheel (Static) | 306kgs |
| Temperature | -20°C to +60°C | Fork Type | Rigid Caster |
| Stainless | N/A | Electrical Conductivity | N/A |
| Anti-Static | N/A | Weight | 1.37kgs |
| Standard | ISO22883 | | |

* For any deviation between metric and imperial spec, please refer to the metric spec.

## Performance

**Rolling Smoothness**
Max. 5 points Score: 5

**Quiet Operation**
Max. 5 points Score: 5

**Floor Surface Preservation**
Max. 5 points Score: 5

## Applications

Ideal for indoor equipment and carts that are moved often and need quiet rolling and stable positioning.

- **Manufacturing & Automated Lines:** Production equipment, fixture carts, inspection machines, material transfer carts and mobile workstations.
- **Warehousing & Logistics:** Picking carts, roll cages, platform trucks and material handling carts.
- **Material Handling Carts:** Material carts, platform trucks, roll cages, picking carts and transfer carts.
- **Food Service & Commercial Equipment:** Food carts, prep carts, kitchen equipment and commercial service carts.

## Suitable Floors

Suitable for most flat, hard indoor floors; final selection should still consider load, wheel diameter, wheel material and frequency of use.

- **Smooth Concrete Floors:** For factory production lines, warehouses and general work areas.
- **Indoor Industrial Floors:** For most manufacturing, processing and logistics environments.

## Downloads

PDF **1124-EN-YJ2026112701.pdf**
Product Data Sheet (Metric)

3D **1124-CN-YJ2026112701-d261127113328.rar**
3D drawings are for members only. Please log in to download.

## Related Products