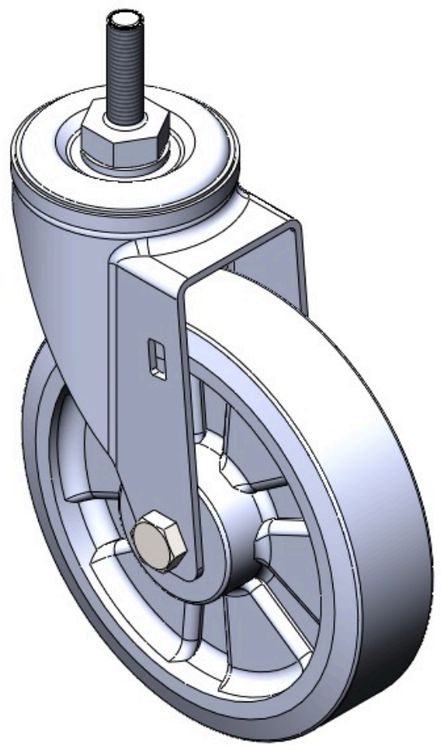

Picture may differ from original product

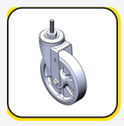

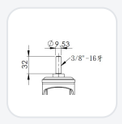

1129 Medical Caster Series

W Resolute Wheel Diameter × Wheel Width 125 x 31mm

TW-4112905002024 Copy model no.

Wheel Diameter	Load Capacity (Dynamic)	Overall Height	Wheel Bearing
125mm	147kgs	166mm	Wheels With Ball Bearings

- Swivel Caster, Riveted Stamping Fork - 3/8-16 threads
- Zine-Plated, Mounting Type - Threaded Stem
- Reinforced impact-resistant polypropylene core, High-Quality Reinforced Polypropylene Rubber (TPR) Wheel Tread
- Dark gray, Bearing - Ball Bearing
- Wheel tread: Thermoplastic rubber elastomer (TPR)
- Wheel Center: Made of high-quality impact-resistant polypropylene

Product descriptions are for reference only. The actual product shall prevail.

Product Data Sheet (Metric) | 3D Drawing Request

3D drawings are for members only. Please log in to download.

Product Data Sheet

Metric | Imperial

Wheel Diameter	125mm	Wheel Width	31mm
Wheel Bearing	Wheels With Ball Bearings	Threaded Stem	3/8 " -16牙
Threaded Length	32mm	Offset	37.5mm
Swivel Interference	200mm	Overall Height	166mm
Swivel Radius	100mm	Hardness Of Tread	72±5° Shore A
Load Capacity (Dynamic)	147kgs	Load Capacity (Static)	220.5kgs
Temperature	-20°C to +60°C	Fork Type	Swivel Caster
Stainless	N/A	Electrical Conductivity	N/A
Anti-Static	N/A	Weight	0.65kgs
Standard	ISO22883		

* For any deviation between metric and imperial spec, please refer to the metric spec.

Performance

Rolling Smoothness
Max. 5 points Score: 5

Quiet Operation
Max. 5 points Score: 5

Floor Surface Preservation
Max. 5 points Score: 5

Downloads

PDF **TW-41129050020243.pdf**
Product Data Sheet (Metric)

3D **4112905002024.rar**
3D drawings are for members only. Please log in to download.

© 2026 DERSHENG CO., LTD. All rights reserved.