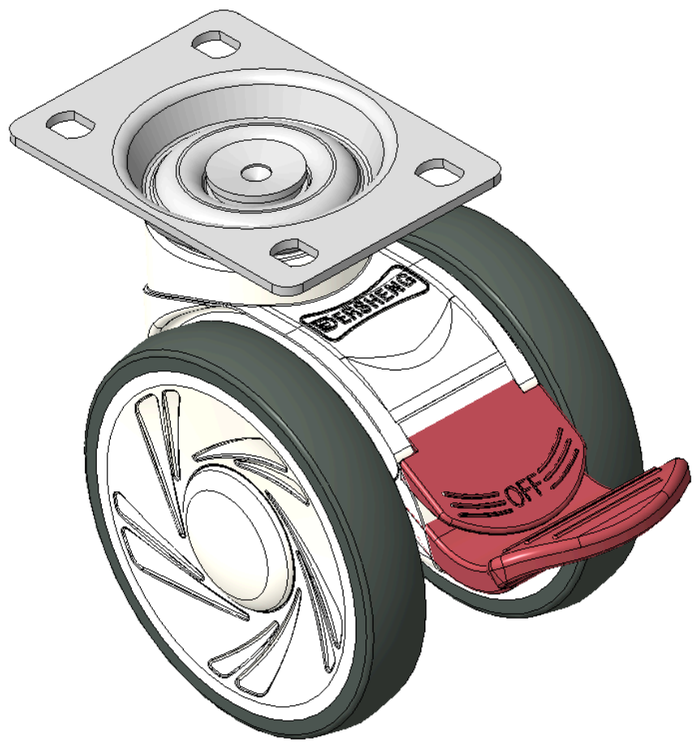

Picture may differ from original product



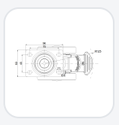

1146 46 Ascendant Series Caster Series(All Plastic)

Double-Ball Full-Effect Wheel (White-Dark Gray) Wheel Diameter × Wheel Width 100 × 18mm

KS-11460400264013A Copy model no.

Wheel Diameter	Load Capacity (Dynamic)	Overall Height	Wheel Bearing
100mm	100kgs	123mm	Wheels With Ball Bearings

- Short, Total Brake Casters, 75x45 angled perforated Top Plate
- White legs made of polypropylene reinforced material
- Rust-proof, Corrosion resistant, Attractive appearance, Economical, and allows for smooth rotation
- High-Quality Impact-Resistant Polypropylene Wheel Center, High-Quality Reinforced Polypropylene Rubber (TPR) Wheel Tread
- Dark gray, Bearing—Ball Bearings
- Wheel tread: Thermoplastic rubber elastomer (TPR)
- Wheel Center: Made of high-quality impact-resistant polypropylene

Product descriptions are for reference only. The actual product shall prevail.

Product Data Sheet (Metric) | 3D Drawing Request

3D drawings are for members only. Please log in to download.

Product Data Sheet

Metric | Imperial

Wheel Diameter	100mm	Wheel Width	85mm
Wheel Bearing	Wheels With Ball Bearings	Plate Size	96 x 69mm
Bolt Hole Spacing	75 x 45mm	Plate Hole	11 x 8.6mm
Overall Height	123mm	Hardness Of Tread	82±5° Shore A
Load Capacity (Dynamic)	100kgs	Load Capacity (Static)	150kgs
Temperature	-20°C to +60°C	Fork Type	Rigid Caster
Stainless	N/A	Electrical Conductivity	N/A
Anti-Static	N/A	Weight	0.76kgs
Standard	ISO22881		

* For any deviation between metric and imperial spec, please refer to the metric spec.

Performance

Rolling Smoothness
Max. 5 points Score: 4

Quiet Operation
Max. 5 points Score: 4

Floor Surface Preservation
Max. 5 points Score: 5

Downloads

PDF **KS-11460400264013A3.pdf**
Product Data Sheet (Metric)

3D **KS-11460400264013A.rar**
3D drawings are for members only. Please log in to download.

Related Products

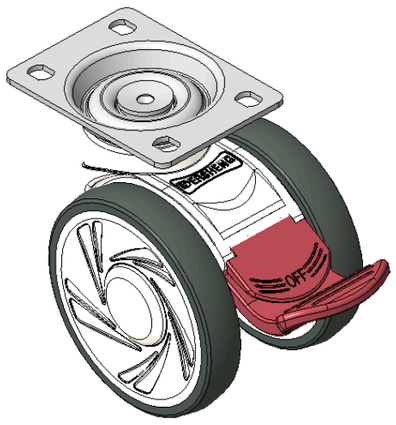

1146 46 Ascendant Series Caster Series(All Plas
Double-Ball Full-Effect Wheel (White-Dark Gray) Wheel Diamete…
KS-11460400454013

wheel diameter	dynamic load	overall height
100 mm	100 kg	123 mm

View specs →

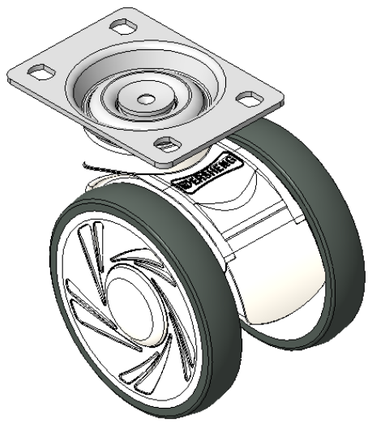

1146 46 Ascendant Series Caster Series(All Pla
Double-Ball Full-Effect Wheel (White-Dark Gray) Wheel Diamete…
KS-11460400451013

wheel diameter	dynamic load	overall height
100 mm	100 kg	123 mm

View specs →

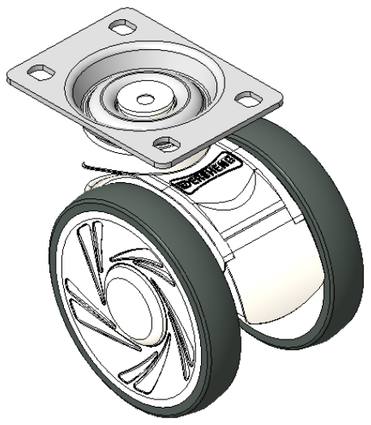

1146 46 Ascendant Series Caster Series(All Pla
Double-Ball Full-Effect Wheel (White-Dark Gray) Wheel Diamete…
KS-11460400452013

wheel diameter	dynamic load	overall height
100 mm	100 kg	123 mm

View specs →

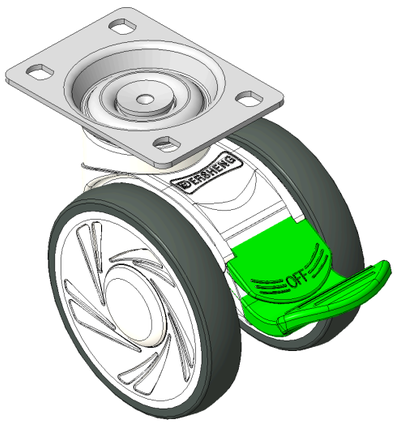

1146 46 Ascendant Series Caster Series(All Pla
Double-Ball Full-Effect Wheel (White-Dark Gray) Wheel Diamete…
KS-11460400454253

wheel diameter	dynamic load	overall height
100 mm	100 kg	123 mm

View specs →