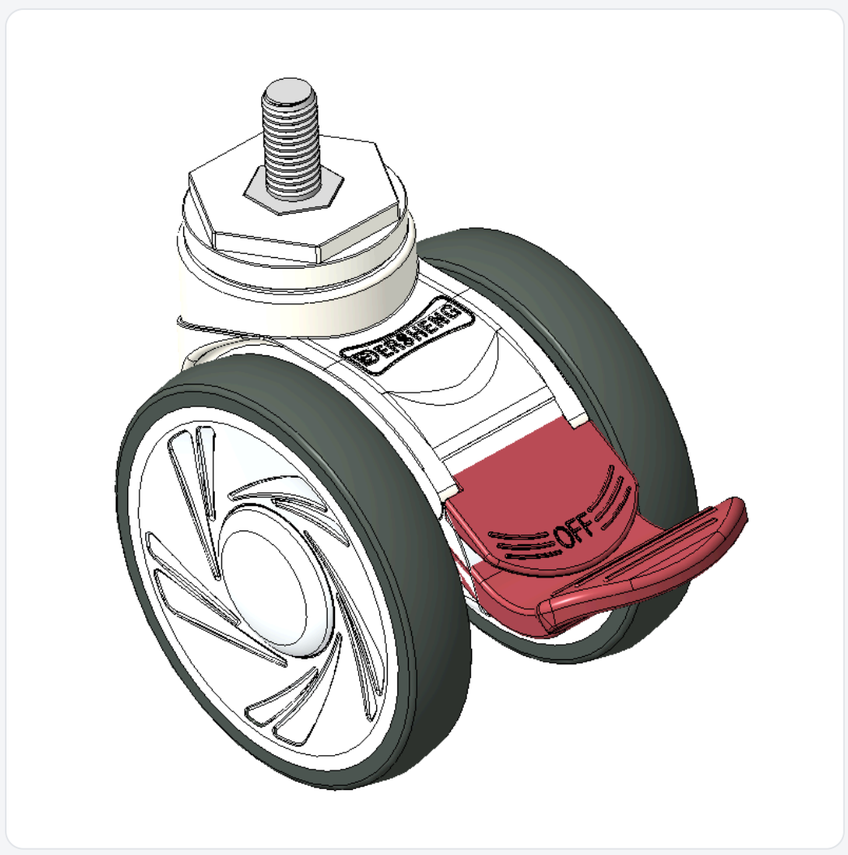

Picture may differ from original product



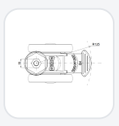

1146 46 Ascendant Series Caster Series(All Plastic)

Double-Ball Full-Effect Wheel (White-Dark Gray) Wheel Diameter × Wheel Width 100 × 18mm

KS-11460400266013A Copy model no.

Wheel Diameter	Load Capacity (Dynamic)	Overall Height	Wheel Bearing
100mm	90kgs	120mm	Wheels With Ball Bearings

- Short Total Brake Casters, Threaded Stem M12×25
- White Caster Fork made of polypropylene reinforced material
- Rust-proof, Corrosion resistant, Attractive appearance, Economical, and highly maneuverable
- High-Quality Impact-Resistant Polypropylene Wheel Center, High-Quality Reinforced Polypropylene Rubber (TPR) Wheel Tread
- Dark gray, Bearing—Ball Bearings
- Wheel tread: Thermoplastic rubber elastomer (TPR)
- Wheel Center: Made of high-quality impact-resistant polypropylene

Product descriptions are for reference only. The actual product shall prevail.

Product Data Sheet (Metric) | 3D Drawing Request

3D drawings are for members only. Please log in to download.

Product Data Sheet

Metric | Imperial

Wheel Diameter	100mm	Wheel Width	85mm
Wheel Bearing	Wheels With Ball Bearings	Threaded Stem	M12
Threaded Length	25mm	Overall Height	120mm
Hardness Of Tread	82±5° Shore A	Load Capacity (Dynamic)	90kgs
Load Capacity (Static)	135 kgs	Temperature	-20°C to +60°C
Fork Type	Rigid Caster	Stainless	N/A
Electrical Conductivity	N/A	Anti-Static	N/A
Weight	0.25kgs	Standard	ISO22881

* For any deviation between metric and imperial spec, please refer to the metric spec.

Performance

Rolling Smoothness
Max. 5 points Score: 4

Quiet Operation
Max. 5 points Score: 4

Floor Surface Preservation
Max. 5 points Score: 5

Downloads

PDF **1146-EN-KS2026102715.pdf**
Product Data Sheet (Metric)

3D **KS-11460400266013A.rar**
3D drawings are for members only. Please log in to download.

Related Products

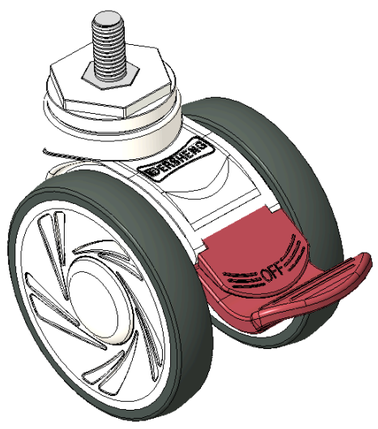

1146 46 Ascendant Series Caster Series(All Pla:
Double-Ball Full-Effect Wheel (White-Dark Gray) Wheel Diamete…
KS-11460400456013
wheel diameter 100 mm | dynamic load 100 kg | overall height 120 mm
View specs →

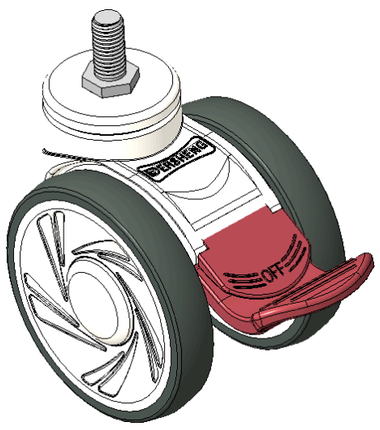

1146 46 Ascendant Series Caster Series(All Pla:
Double-Ball Full-Effect Wheel (White-Dark Gray) Wheel Diamete…
KS-11460400456613
wheel diameter 100 mm | dynamic load 100 kg | overall height 120 mm
View specs →

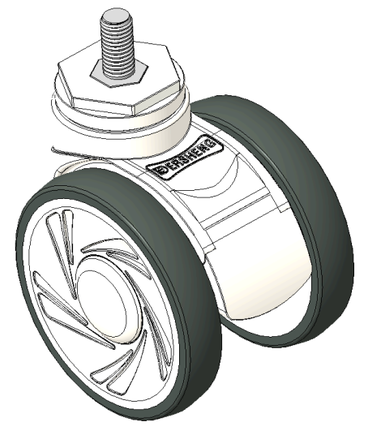

1146 46 Ascendant Series Caster Series(All Pla:
Double-Ball Full-Effect Wheel (White-Dark Gray) Wheel Diamete…
KS-11460400455013
wheel diameter 100 mm | dynamic load 100 kg | overall height 120 mm
View specs →

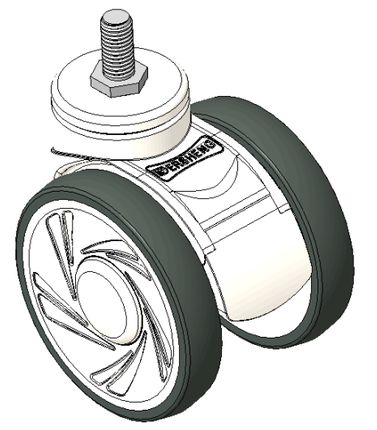

1146 46 Ascendant Series Caster Series(All Pla:
Double-Ball Full-Effect Wheel (White-Dark Gray) Wheel Diamete…
KS-11460400455613
wheel diameter 100 mm | dynamic load 100 kg | overall height 120 mm
View specs →