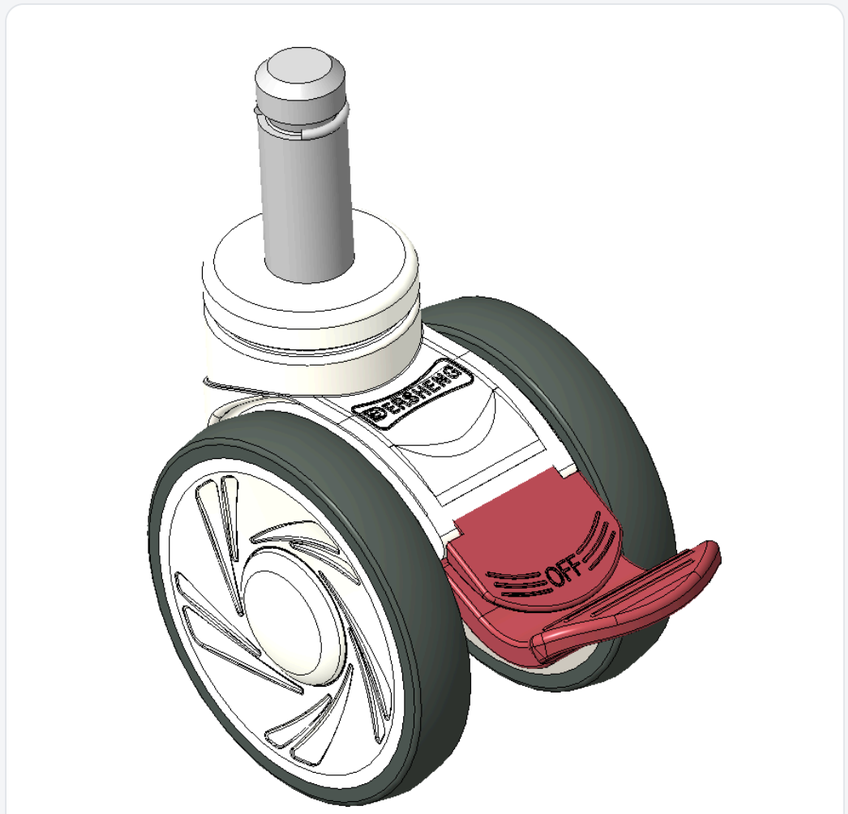


Picture may differ from original product



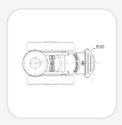

1146 46 Ascendant Series Caster Series(All Plastic)

# Double-Ball Full-Effect Wheel (White-Dark Gray) Wheel Diameter × Wheel Width 100 × 18mm

KS-11460400268013A Copy model no.

| Wheel Diameter | Load Capacity (Dynamic) | Overall Height | Wheel Bearing |
|---|---|---|---|
| 100mm | 100kgs | 120mm | Wheels With Ball Bearings |

- Short Total Brake Casters, mortise-and-tenon Riveted Stamping Fork—Ø21.5x56L
- Window gray legs made of polypropylene reinforced material
- Rust-proof, Corrosion resistant, Attractive appearance, Economical, and Smooth rotation
- High-Quality Impact-Resistant Polypropylene Wheel Center, High-Quality Reinforced Polypropylene Rubber (TPR) Wheel Tread
- Dark gray, Bearing—Ball Bearings
- Wheel tread: Thermoplastic rubber elastomer (TPR)
- Wheel Center: Made of high-quality impact-resistant polypropylene

Product descriptions are for reference only. The actual product shall prevail.

Product Data Sheet (Metric) | 3D Drawing Request

3D drawings are for members only. Please log in to download.

## Product Data Sheet

Metric | Imperial

| | | | |
|---|---|---|---|
| Wheel Diameter | 100mm | Wheel Width | 85mm |
| Wheel Bearing | Wheels With Ball Bearings | Stem Diameter | 21.6mm |
| Stem Length | 56mm | Offset | 32mm |
| Swivel Interference | 250mm | Overall Height | 120mm |
| Swivel Radius | 125mm | Hardness Of Tread | 82±5° Shore A |
| Load Capacity (Dynamic) | 100kgs | Load Capacity (Static) | 150kgs |
| Temperature | -20°C to +60°C | Fork Type | Swivel Caster |
| Stainless | N/A | Electrical Conductivity | N/A |
| Anti-Static | N/A | Weight | 0.80kgs |
| Standard | ISO22881 | | |

* For any deviation between metric and imperial spec, please refer to the metric spec.

## Performance

**Rolling Smoothness**
Max. 5 points Score: 4

**Quiet Operation**
Max. 5 points Score: 4

**Floor Surface Preservation**
Max. 5 points Score: 5

## Downloads

PDF **1146-EN-KS2026102817.pdf**
Product Data Sheet (Metric)

3D **KS-11460400268013A.rar**
3D drawings are for members only. Please log in to download.

## Related Products

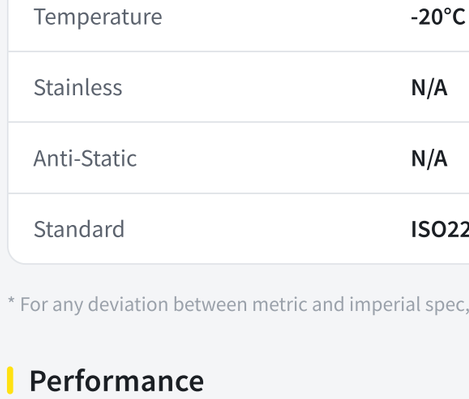


1146 46 Ascendant Series Caster Series(All Plas
**Double-Ball Full-Effect Wheel (White-Dark Gray) Wheel Diamete…**
KS-11460400458013

| wheel diameter | dynamic load | overall height |
|---|---|---|
| 100 mm | 100 kg | 120 mm |

View specs →

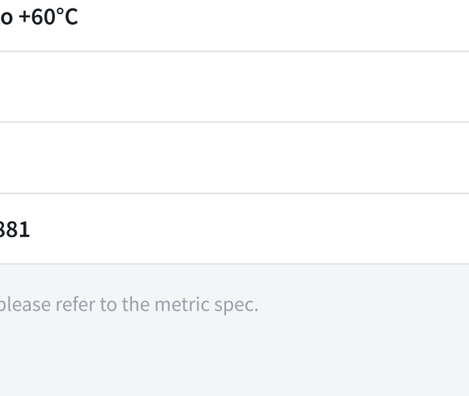


1146 46 Ascendant Series Caster Series(All Plas
**Double-Ball Full-Effect Wheel (White-Dark Gray) Wheel Diamete…**
KS-11460400457013

| wheel diameter | dynamic load | overall height |
|---|---|---|
| 100 mm | 100 kg | 120 mm |

View specs →

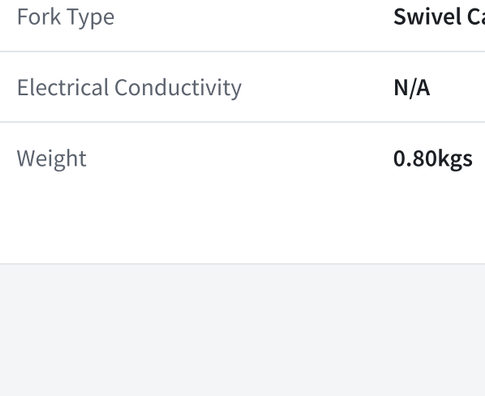


1146 46 Ascendant Series Caster Series(All Plas
**Double-Ball Full-Effect Wheel (White-Dark Gray) Wheel Diamete…**
KS-11460400458083

| wheel diameter | dynamic load | overall height |
|---|---|---|
| 100 mm | 100 kg | 120 mm |

View specs →




1146 46 Ascendant Series Caster Series(All Plas
**Double-Ball Full-Effect Wheel (White-Dark Gray) Wheel Diamete…**
KS-11460400267013

| wheel diameter | dynamic load | overall height |
|---|---|---|
| 100 mm | 100 kg | 120 mm |

View specs →