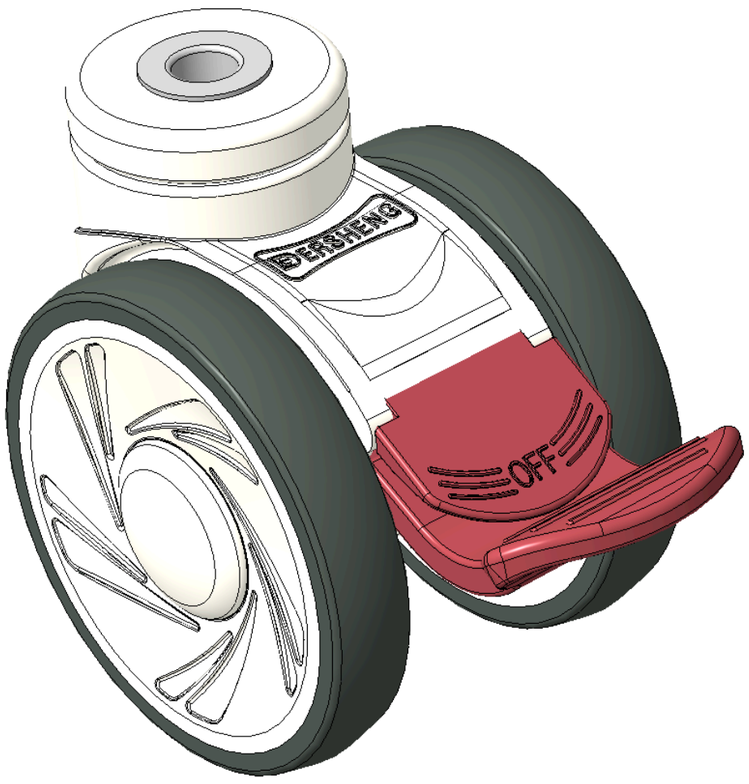


Picture may differ from original product



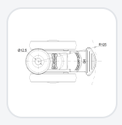

1146 46 Ascendant Series Caster Series(All Plastic)

# Double-Ball Full-Effect Wheel (White-Dark Gray) Wheel Diameter × Wheel Width 100 × 18mm

KS-11460400269423 Copy model no.

| Wheel Diameter | Load Capacity (Dynamic) | Overall Height | Wheel Bearing |
|---|---|---|---|
| 100mm | 90kgs | 120mm | Wheels With Ball Bearings |

- Long Total Brake Casters, Single Bolthole polyamide legs — hollow Ø12.5
- White legs are made of polyamide reinforcement.
- Rust-proof, Corrosion resistant, Attractive appearance, Economical, and allows for Smooth rotation.
- High-Quality Impact-Resistant Polypropylene Wheel Center, High-Quality Reinforced Polypropylene Rubber (TPR) Wheel Tread.
- Dark gray, Bearing — Ball Bearings.
- Wheel tread: Thermoplastic rubber elastomer (TPR)
- Wheel Center: Made of high-quality impact-resistant polypropylene

Product descriptions are for reference only. The actual product shall prevail.

Product Data Sheet (Metric) | 3D Drawing Request

3D drawings are for members only. Please log in to download.

## Product Data Sheet

Metric | Imperial

| | | | |
|---|---|---|---|
| Wheel Diameter | 100mm | Wheel Width | 85mm |
| Wheel Bearing | Wheels With Ball Bearings | Single Bolt HoleCentre Hole | 12.5mm |
| Offset | 32mm | Swivel Interference | 250mm |
| Overall Height | 120mm | Swivel Radius | 125mm |
| Hardness Of Tread | 82±5° Shore A | Load Capacity (Dynamic) | 90kgs |
| Load Capacity (Static) | 135kgs | Temperature | -20°C to +60°C |
| Fork Type | Swivel Caster | Stainless | N/A |
| Electrical Conductivity | N/A | Anti-Static | N/A |
| Weight | 0.23kgs | Standard | ISO22881 |

* For any deviation between metric and imperial spec, please refer to the metric spec.

## Performance

**Rolling Smoothness**
Max. 5 points Score: 4

**Quiet Operation**
Max. 5 points Score: 4

**Floor Surface Preservation**
Max. 5 points Score: 5

## Downloads

PDF **1146-EN-KS2026102913.pdf**
Product Data Sheet (Metric)

3D **KS-11460400269423.rar**
3D drawings are for members only. Please log in to download.

## Related Products

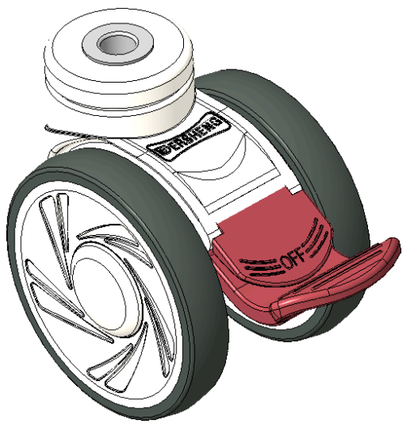

1146 46 Ascendant Series Caster Series(All Pla:
**Double-Ball Full-Effect Wheel (White-Dark Gray) Wheel Diamete…**
KS-11460400459423

| wheel diameter | dynamic load | overall height |
|---|---|---|
| 100 mm | 100 kg | 120 mm |

View specs →

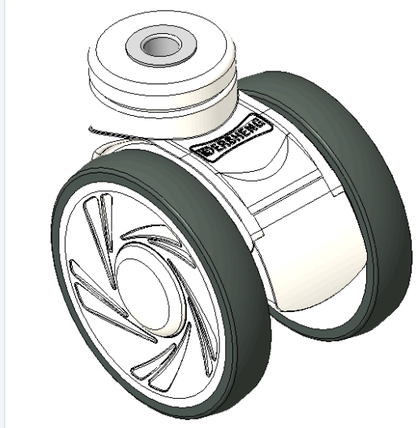

1146 46 Ascendant Series Caster Series(All Pla:
**Double-Ball Full-Effect Wheel (White-Dark Gray) Wheel Diamete…**
KS-11460400459223

| wheel diameter | dynamic load | overall height |
|---|---|---|
| 100 mm | 100 kg | 120 mm |

View specs →

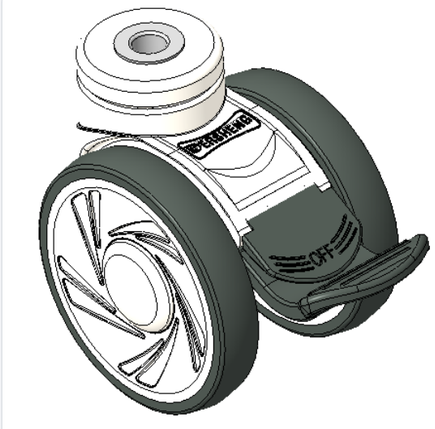

1146 46 Ascendant Series Caster Series(All Pla:
**Double-Ball Full-Effect Wheel (White-Dark Gray) Wheel Diamete…**
KS-11460400459423B

| wheel diameter | dynamic load | overall height |
|---|---|---|
| 100 mm | 100 kg | 120 mm |

View specs →

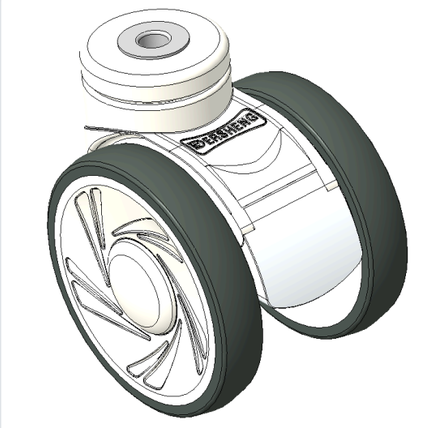

1146 46 Ascendant Series Caster Series(All Pla:
**Double-Ball Full-Effect Wheel (White-Dark Gray) Wheel Diamete…**
KS-11460400269213

| wheel diameter | dynamic load | overall height |
|---|---|---|
| 100 mm | 90 kg | 120 mm |

View specs →