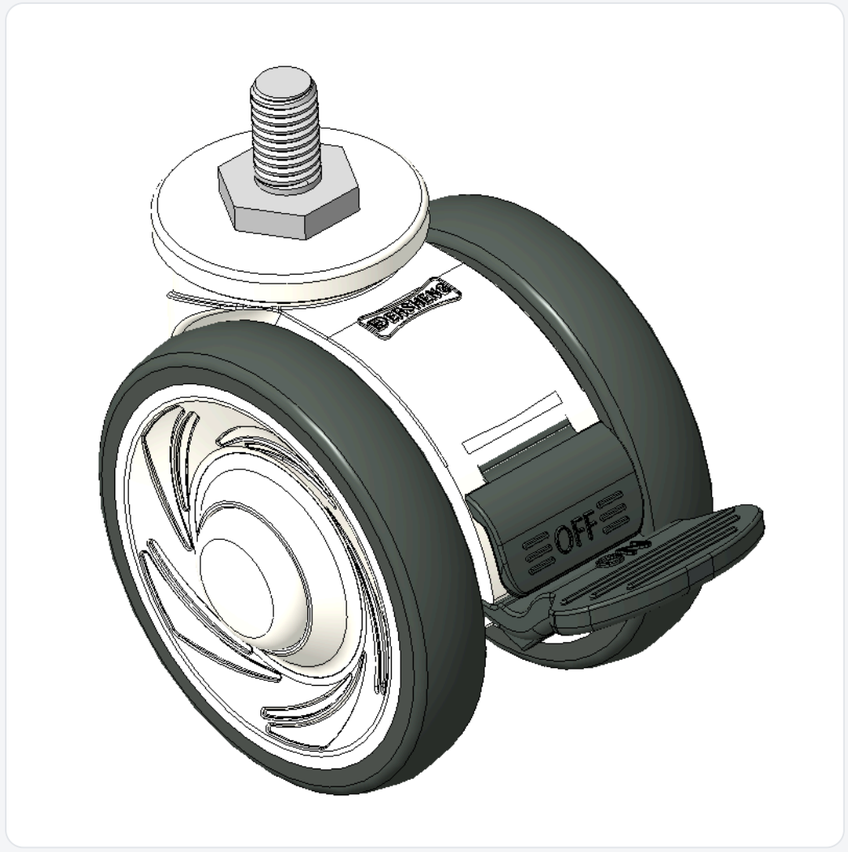

Picture may differ from original product


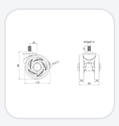


1146 46 Ascendant Series Caster Series(All Plastic)

Double-Ball Full-Effect Wheel (White-Dark Gray) Wheel Diameter × Wheel Width 75 × 14mm

KS-11460300456033 Copy model no.

Wheel Diameter	Load Capacity (Dynamic)	Overall Height	Wheel Bearing
75mm	90kgs	84mm	Wheels With Ball Bearings

- Short Total Brake Casters, Threaded Stem M10x17
- White Caster Fork made of polypropylene reinforced material
- Rust-proof, Corrosion resistant, Attractive appearance, Economical, and allows for smooth rotation
- High-Quality Impact-Resistant Polypropylene Wheel Center, High-Quality Reinforced Polypropylene Rubber (TPR) Wheel Tread
- Dark gray, Bearing—Ball Bearings
- Wheel tread: Thermoplastic rubber elastomer (TPR)
- Wheel Center: Made of high-quality impact-resistant polypropylene

Product descriptions are for reference only. The actual product shall prevail.

Product Data Sheet (Metric) | 3D Drawing Request

3D drawings are for members only. Please log in to download.

Product Data Sheet

Metric | Imperial

Wheel Diameter	**75mm**	Wheel Width	**60mm**
Wheel Bearing	**Wheels With Ball Bearings**	Threaded Stem	**M10**
Threaded Length	**17mm**	Offset	**23mm**
Swivel Interference	**179mm**	Overall Height	**84mm**
Swivel Radius	**89.5mm**	Hardness Of Tread	**72±5° Shore A**
Load Capacity (Dynamic)	**90kgs**	Load Capacity (Static)	**135kgs**
Temperature	**-20°C to +60°C**	Fork Type	**Swivel Caster With Total Brake**
Stainless	**N/A**	Electrical Conductivity	**N/A**
Anti-Static	**N/A**	Weight	**0.31kgs**
Standard	**ISO22881**		

* For any deviation between metric and imperial spec, please refer to the metric spec.

Performance

Rolling Smoothness
Max. 5 points Score: 5

Quiet Operation
Max. 5 points Score: 5

Floor Surface Preservation
Max. 5 points Score: 5

Downloads

PDF **1146-EN-KS2026110401.pdf**
Product Data Sheet (Metric)

3D **1146-CN-KS2026110401-d261104165223.rar**
3D drawings are for members only. Please log in to download.

Related Products

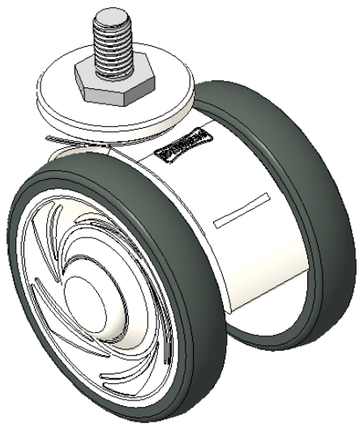

1146 46 Ascendant Series Caster Series(All Pla:

Double-Ball Full-Effect Wheel (White-Dark Gray) Wheel Diamete···

KS-11460300455023

wheel diameter	dynamic load	overall height
075 mm	90 kg	84 mm

View specs →

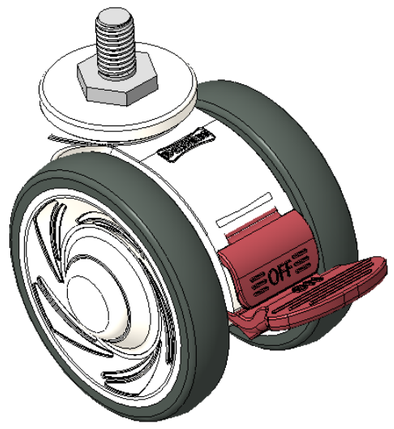

1146 46 Ascendant Series Caster Series(All Pla:

Double-Ball Full-Effect Wheel (White-Dark Gray) Wheel Diamete···

KS-11460300456023

wheel diameter	dynamic load	overall height
075 mm	90 kg	84 mm

View specs →