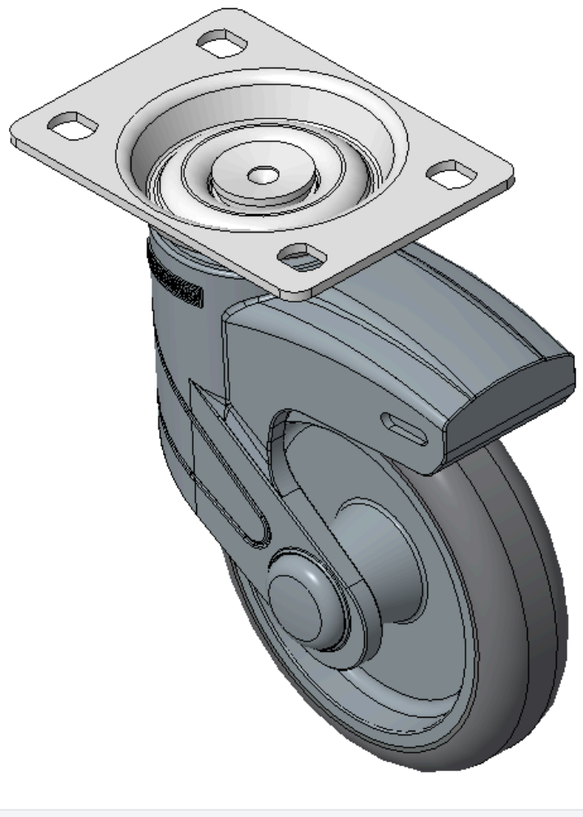

Picture may differ from original product





1155 STAT Series Caster Series (All Plastic)

Classic PPR Wheel (Middle Tube Blue-Gray Dark Gray) Wheel Diameter × Wheel Width 100 x 24mm

KS-11550402261063 Copy model no.

Wheel Diameter	Load Capacity (Dynamic)	Overall Height	Wheel Bearing
100mm	60kgs	141.5mm	Wheel With Plain Bearing

- Fixed caster，Premium top plate—Top plate 75x45
- Blue-gray bracket made of reinforced polyamide，Top plate mounting
- Rust-resistant，Corrosion-resistant，Attractive appearance，Economical，Smooth swiveling
- Impact-resistant polypropylene wheel core，Thermoplastic elastomer（TPR）Tread
- Dark gray，Wheel—Sleeve type
- Tread：Thermoplastic rubber elastomer(TPR)
- Wheel core：Made of high-quality impact-resistant polypropylene

Product descriptions are for reference only. The actual product shall prevail.

Product Data Sheet (Metric) | 3D Drawing Request

3D drawings are for members only. Please log in to download.

Product Data Sheet

Metric | Imperial

Wheel Diameter	100mm	Wheel Width	24.5mm
Wheel Bearing	Wheel With Plain Bearing	Plate Size	96 x 69mm
Bolt Hole Spacing	75 x 45mm	Plate Hole	11.1 x 8.6mm
Overall Height	141.5mm	Hardness Of Tread	85±5° Shore A
Load Capacity (Dynamic)	60kgs	Load Capacity (Static)	90kgs
Temperature	-20°C to +80°C	Fork Type	Rigid Caster
Stainless	N/A	Electrical Conductivity	N/A
Anti-Static	N/A	Weight	0.51kgs
Standard	ISO22881		

* For any deviation between metric and imperial spec, please refer to the metric spec.

Performance

Rolling Smoothness
Max. 5 points Score: 5

Quiet Operation
Max. 5 points Score: 5

Floor Surface Preservation
Max. 5 points Score: 5

Downloads

PDF **KS-115504022610633.pdf**
Product Data Sheet (Metric)

3D **KS-11550402261063.zip**
3D drawings are for members only. Please log in to download.

Related Products

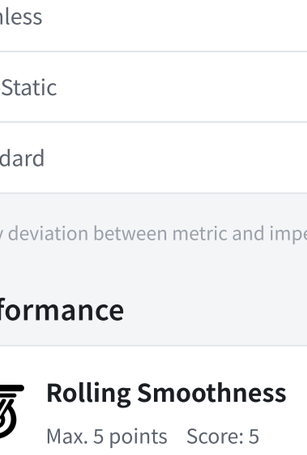

1155 STAT Series Caster Series (All Plastic)

Classic PPR Wheel (Middle Tube Blue-Gray Dark Gray) Wheel···

KS-11550402262123

wheel diameter	dynamic load	overall height
100 mm	60 kg	141.5 mm

View specs →

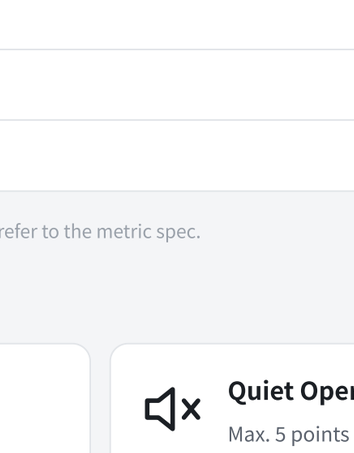

1155 STAT Series Caster Series (All Plastic)

Classic PPR Wheel (Middle Tube Blue-Gray Dark Gray) Wheel···

KS-11550402264123

wheel diameter	dynamic load	overall height
100 mm	60 kg	141.5 mm

View specs →

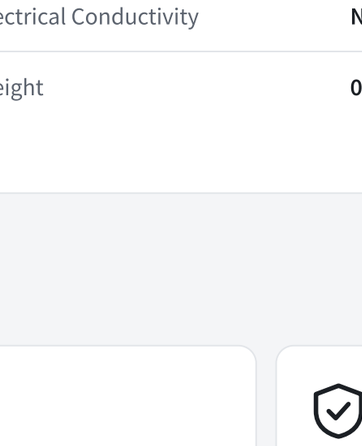

1155 STAT Series Caster Series (All Plastic)

Classic PPR Wheel (Middle Tube Blue-Gray Dark Gray) Wheel···

KS-11550402264123

wheel diameter	dynamic load	overall height
100 mm	60 kg	141.5 mm

View specs →