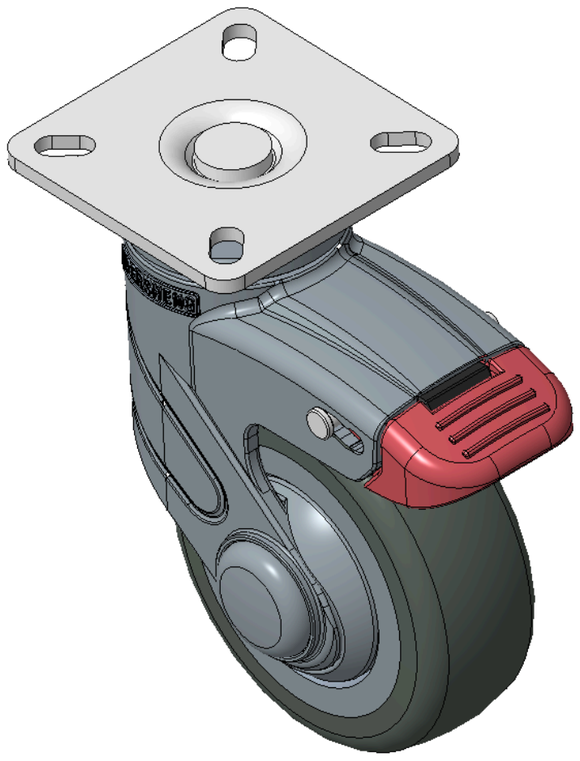

Picture may differ from original product



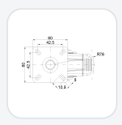

1155 STAT Series Caster Series (All Plastic)

PPR (Blue-Grey) Wheel Diameter × Wheel Width 75 x 27mm

KS-11550300264013 Copy model no.

Wheel Diameter	Load Capacity (Dynamic)	Overall Height	Wheel Bearing
75mm	50kgs	113.5mm	Wheels With Ball Bearings

- Short Total Brake Casters with With locking system, Top Plate 42.5x42.5
- Blue-gray legs made of polyamide reinforced material
- Rust-proof, Corrosion resistant, Attractive appearance, Economical, and Smooth rotation
- High-Quality Impact-Resistant Polypropylene Wheel Center, High-Quality Reinforced Polypropylene Rubber (TPR) Wheel Tread
- Dark gray wheels—with Dust Cap
- Wheel tread: Thermoplastic rubber elastomer (TPR)
- Wheel Center: Made of high-quality impact-resistant polypropylene

Product descriptions are for reference only. The actual product shall prevail.

Product Data Sheet (Metric) | 3D Drawing Request

3D drawings are for members only. Please log in to download.

Product Data Sheet

Metric | Imperial

Wheel Diameter	75mm	Wheel Width	27mm
Wheel Bearing	Wheels With Ball Bearings	Plate Size	60mm
Bolt Hole Spacing	42.5×42.5mm	Plate Hole	10.9 x 6mm
Offset	27mm	Swivel Interference	152mm
Overall Height	113.5mm	Swivel Radius	76mm
Hardness Of Tread	82±5° Shore A	Load Capacity (Dynamic)	50kgs
Load Capacity (Static)	75kgs	Temperature	-20°C to +60°C
Fork Type	Swivel Caster With Total Brake	Stainless	N/A
Electrical Conductivity	N/A	Anti-Static	N/A
Weight	0.54kgs	Standard	ISO22883

* For any deviation between metric and imperial spec, please refer to the metric spec.

Performance

Rolling Smoothness
Max. 5 points Score: 4

Quiet Operation
Max. 5 points Score: 4

Floor Surface Preservation
Max. 5 points Score: 5

Applications

Ideal for indoor equipment and carts that are moved often and need quiet rolling and stable positioning.

- **Food Factories & Food Service:** Central kitchens, bakery areas, food prep areas, worktable carts, food carts and ingredient carts.
- **Laboratories & Cleanrooms:** Precision instruments, testing equipment, lab carts and mobile workbenches.
- **Medical & Healthcare Settings:** Medical carts, meal delivery carts, care equipment and instrument stands in hospitals, clinics and long-term care facilities.

Compatible Equipment

Can be fitted to all kinds of equipment and carriers that need to move, turn or be positioned.

- **Tool & Workbench Carts:** Maintenance tool carts, parts carts, assembly carts and mobile workstations.
- **Medical & Care Carts:** Medical carts, treatment carts, meal delivery carts and care equipment.
- **Machinery & Instrument Bases:** Production equipment, machining equipment, testing equipment and laboratory instruments.

Suitable Floors

Suitable for most flat, hard indoor floors; final selection should still consider load, wheel diameter, wheel material and frequency of use.

- **Epoxy / PU Floors:** Common in factories, laboratories and commercial spaces; suited to frequent pushing.
- **Tile, Stone & Marble Floors:** For healthcare, office, retail and premium indoor spaces; low-noise, floor-friendly wheel materials are recommended.
- **Indoor Industrial Floors:** For most manufacturing, processing and logistics environments.
- **PVC / Vinyl Floors:** For healthcare, office, commercial and home spaces; quieter, floor-protecting wheel materials are recommended.

Downloads

PDF **1155-EN-KS2026110204.pdf**
Product Data Sheet (Metric)

3D **1155-CN-KS2026110204-d261102104045.rar**
3D drawings are for members only. Please log in to download.