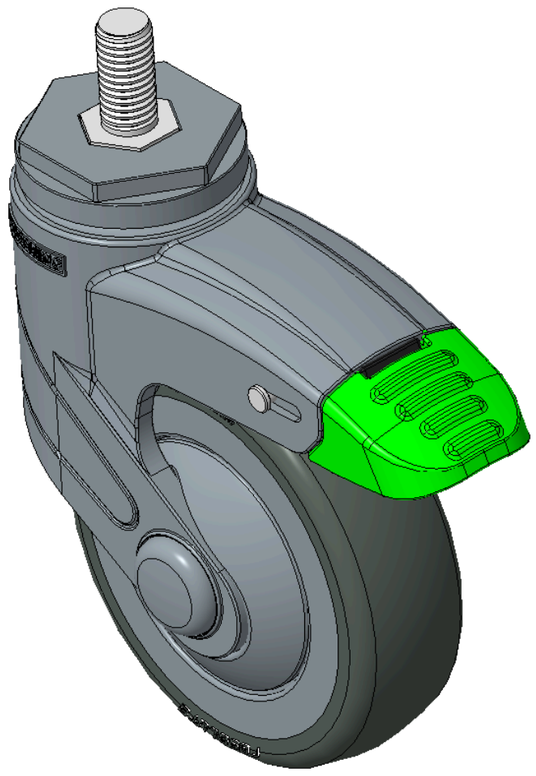

Picture may differ from original product



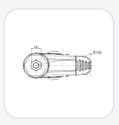

1155 STAT Series Caster Series (All Plastic)

Resolute (blue gray) Wheel Diameter × Wheel Width 100 x 31mm

KS-11550400456103A Copy model no.

Wheel Diameter	Load Capacity (Dynamic)	Overall Height	Wheel Bearing
100mm	90kgs	139mm	Wheels With Ball Bearings

- Long double-brake design, toothed With locking system with blue-gray polyamide legs—M12x25
- Zinc-plated Threaded Stem surface, Mounting Type - Threaded Stem device
- High-Quality Impact-Resistant Polypropylene Wheel Center, High-Quality Reinforced Polypropylene Rubber (TPR) wheel rim
- Dark gray, Bearing—Ball Bearings.
- Wheel tread: Thermoplastic rubber elastomer (TPR)
- Wheel Center: Made of high-quality impact-resistant polypropylene

Product descriptions are for reference only. The actual product shall prevail.

Product Data Sheet (Metric) | 3D Drawing Request

3D drawings are for members only. Please log in to download.

Product Data Sheet

Metric | Imperial

Wheel Diameter	100mm	Wheel Width	31mm
Wheel Bearing	Wheels With Ball Bearings	Threaded Stem	M12×P1.75
Threaded Length	25mm	Offset	36mm
Swivel Interference	220mm	Overall Height	139mm
Swivel Radius	110mm	Hardness Of Tread	72±5° Shore A
Load Capacity (Dynamic)	90kgs	Load Capacity (Static)	135kgs
Temperature	-20°C to +60°C	Fork Type	Swivel Caster
Stainless	N/A	Electrical Conductivity	N/A
Anti-Static	N/A	Weight	0.49kgs
Standard	ISO22881		

* For any deviation between metric and imperial spec, please refer to the metric spec.

Performance

Rolling Smoothness
Max. 5 points Score: 5

Quiet Operation
Max. 5 points Score: 5

Floor Surface Preservation
Max. 5 points Score: 5

Downloads

PDF **1155-EN-KS2026110911.pdf**
Product Data Sheet (Metric)

3D **1155-CN-KS2026110911-d261109132954.rar**
3D drawings are for members only. Please log in to download.

Related Products

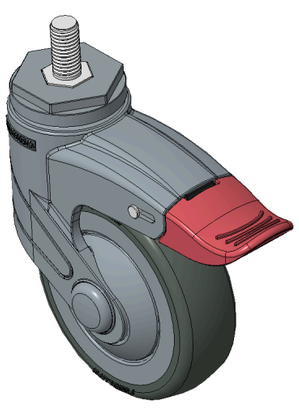

1155 STAT Series Caster Series (All Plastic)

Resolute (blue gray) Wheel Diameter × Wheel Width 100 x···

KS-11550400456053H

wheel diameter	dynamic load	overall height
100 mm	90 kg	139 mm

View specs →

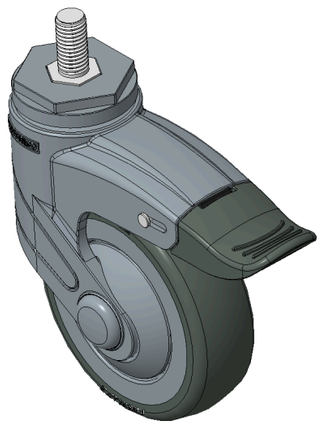

1155 STAT Series Caster Series (All Plastic)

Resolute (blue gray) Wheel Diameter × Wheel Width 100 x···

KS-11550400456093H

wheel diameter	dynamic load	overall height
100 mm	90 kg	139 mm

View specs →