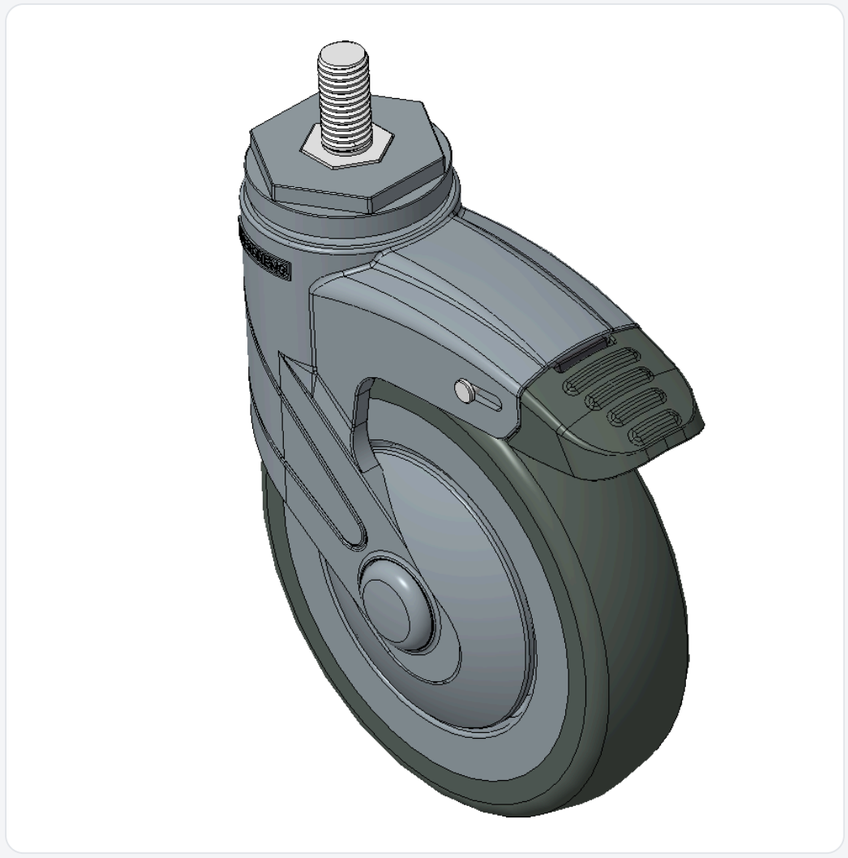

Picture may differ from original product



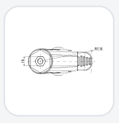

1155 STAT Series Caster Series (All Plastic)

PPR Wheel (Blue Gray) Wheel Diameter×Wheel Width 125×31mm

KS-11550500266443 Copy model no.

Wheel Diameter	Load Capacity (Dynamic)	Overall Height	Wheel Bearing
125mm	100kgs	164mm	Wheel With Plain Bearing

- Casters with long double-lock system, Threaded Stem M12x25
- Blue-gray legs reinforced with polyamide, Threaded Stem installation
- Rust-proof, Corrosion resistant, Attractive appearance, Economical, and Smooth rotation
- High-Quality Impact-Resistant Polypropylene Wheel Center, High-Quality Reinforced Polypropylene Rubber (TPR) Wheel Tread
- Dark gray, Bearing—Plain Bearing, with Dust Cap
- Wheel tread: Thermoplastic rubber elastomer (TPR)
- Wheel Center: Made of high-quality impact-resistant polypropylene

Product descriptions are for reference only. The actual product shall prevail.

Product Data Sheet (Metric) | 3D Drawing Request

3D drawings are for members only. Please log in to download.

Product Data Sheet

Metric | Imperial

Wheel Diameter	125mm	Wheel Width	31mm
Wheel Bearing	Wheel With Plain Bearing	Threaded Stem	M12×P1.75
Threaded Length	25mm	Offset	38mm
Swivel Interference	220mm	Overall Height	164mm
Swivel Radius	110mm	Hardness Of Tread	82±5° Shore A
Load Capacity (Dynamic)	100kgs	Load Capacity (Static)	150kgs
Temperature	-20°C to +60°C	Fork Type	Swivel Caster With Total Brake
Stainless	N/A	Electrical Conductivity	N/A
Anti-Static	N/A	Weight	0.64kgs
Standard	ISO22881		

* For any deviation between metric and imperial spec, please refer to the metric spec.

Performance

Rolling Smoothness
Max. 5 points Score: 4

Quiet Operation
Max. 5 points Score: 4

Floor Surface Preservation
Max. 5 points Score: 5

Downloads

PDF **1155-EN-KS2026111013.pdf**
Product Data Sheet (Metric)

3D **1155-CN-KS2026111013-d261110161120.rar**
3D drawings are for members only. Please log in to download.

Related Products

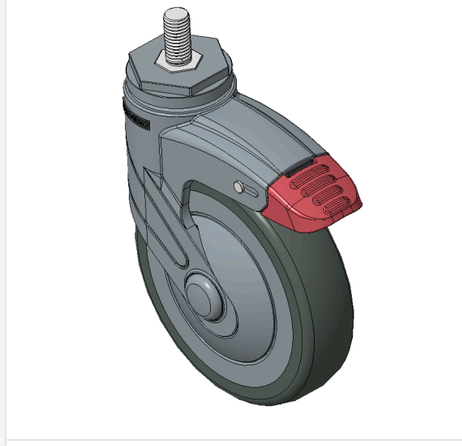

1155 STAT Series Caster Series (All Plastic)
PPR Wheel (Blue Gray) Wheel Diameter×Wheel Width…
KS-11550500266053

wheel diameter	dynamic load	overall height
125 mm	90 kg	164 mm

View specs →

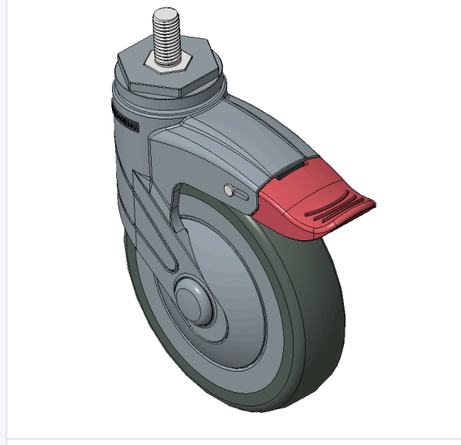

1155 STAT Series Caster Series (All Plastic)
PPR Wheel (Blue Gray) Wheel Diameter×Wheel Width…
KS-11550500266053H

wheel diameter	dynamic load	overall height
125 mm	90 kg	164 mm

View specs →

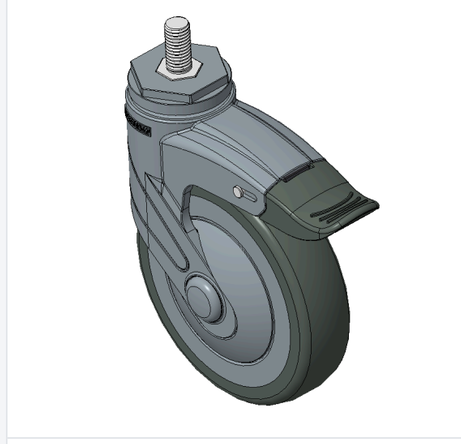

1155 STAT Series Caster Series (All Plastic)
PPR Wheel (Blue Gray) Wheel Diameter×Wheel Width…
KS-11550500266063

wheel diameter	dynamic load	overall height
125 mm	90 kg	164 mm

View specs →

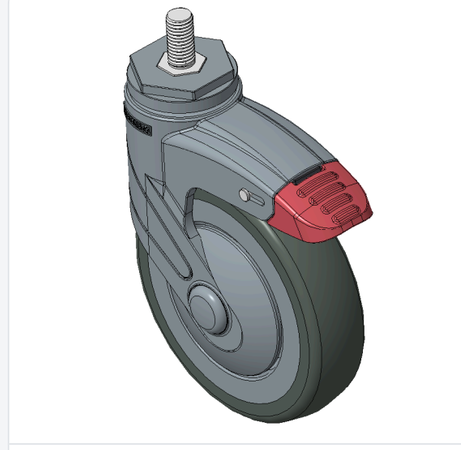

1155 STAT Series Caster Series (All Plastic)
PPR Wheel (Blue Gray) Wheel Diameter×Wheel Width…
KS-11550500266453

wheel diameter	dynamic load	overall height
125 mm	100 kg	164 mm

View specs →