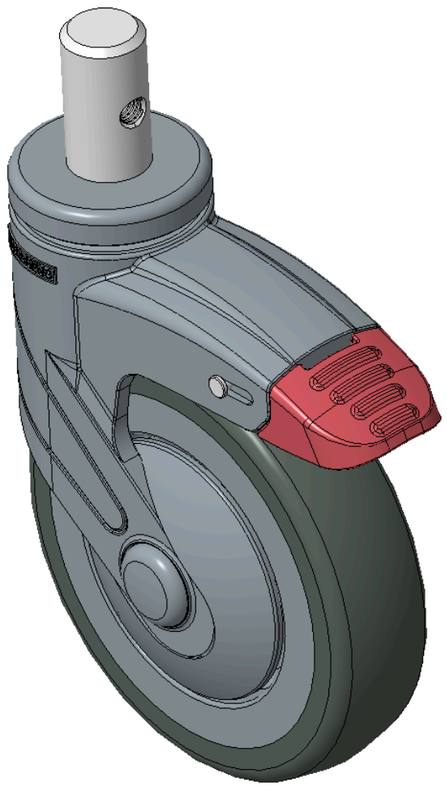

Picture may differ from original product



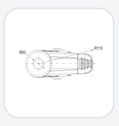

1155 STAT Series Caster Series (All Plastic)

PPR Wheel (Blue Gray) Wheel Diameter×Wheel Width 125×31mm

KS-11550500268473 Copy model no.

Wheel Diameter	Load Capacity (Dynamic)	Overall Height	Wheel Bearing
125mm	90kgs	163mm	Wheel With Plain Bearing

- Casters with a long double-With locking system, rivet-type—Ø22x40L
- Blue-gray legs made of polyamide reinforcement, pin-mounted.
- Rust-proof, Corrosion resistant, Attractive appearance, Economical, and Smooth rotation.
- High-Quality Impact-Resistant Polypropylene Wheel Center, High-Quality Reinforced Polypropylene Rubber (TPR) Wheel Tread.
- Dark gray, Bearing—Plain Bearing, with Dust Cap.
- Wheel tread: Thermoplastic rubber elastomer (TPR)
- Wheel Center: Made of high-quality impact-resistant polypropylene

Product descriptions are for reference only. The actual product shall prevail.

Product Data Sheet (Metric) | 3D Drawing Request

3D drawings are for members only. Please log in to download.

Product Data Sheet

Metric | Imperial

Wheel Diameter	125mm	Wheel Width	31mm
Wheel Bearing	Wheel With Plain Bearing	Stem Diameter	22mm
Stem Length	40mm	Offset	38mm
Swivel Interference	220mm	Overall Height	163mm
Swivel Radius	110mm	Hardness Of Tread	82±5° Shore A
Load Capacity (Dynamic)	90kgs	Load Capacity (Static)	135kgs
Temperature	-20°C to +60°C	Fork Type	Swivel Caster With Total Brake
Stainless	N/A	Electrical Conductivity	N/A
Anti-Static	N/A	Weight	0.59kgs
Standard	ISO22881		

* For any deviation between metric and imperial spec, please refer to the metric spec.

Performance

Rolling Smoothness
Max. 5 points Score: 4

Quiet Operation
Max. 5 points Score: 4

Floor Surface Preservation
Max. 5 points Score: 5

Downloads

PDF **1155-EN-KS2026111103.pdf**
Product Data Sheet (Metric)

3D **1155-CN-KS2026111103-d261111092047.rar**
3D drawings are for members only. Please log in to download.

Related Products

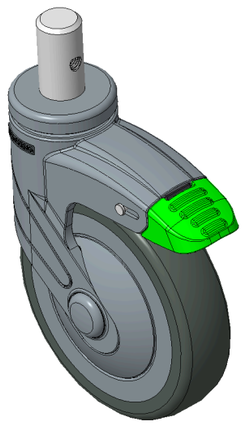

1155 STAT Series Caster Series (All Plastic)
PPR Wheel (Blue Gray) Wheel Diameter×Wheel Width…
KS-11550500268223

wheel diameter	dynamic load	overall height
100 mm	90 kg	163 mm

View specs →

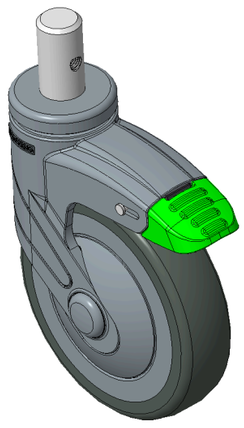

1155 STAT Series Caster Series (All Plastic)
PPR Wheel (Blue Gray) Wheel Diameter×Wheel Width…
KS-11550500268263

wheel diameter	dynamic load	overall height
100 mm	90 kg	163 mm

View specs →

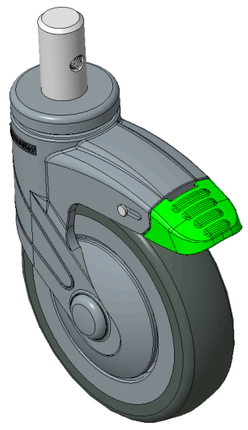

1155 STAT Series Caster Series (All Plastic)
PPR Wheel (Blue Gray) Wheel Diameter×Wheel Width…
KS-11550500268573

wheel diameter	dynamic load	overall height
125 mm	90 kg	163 mm

View specs →