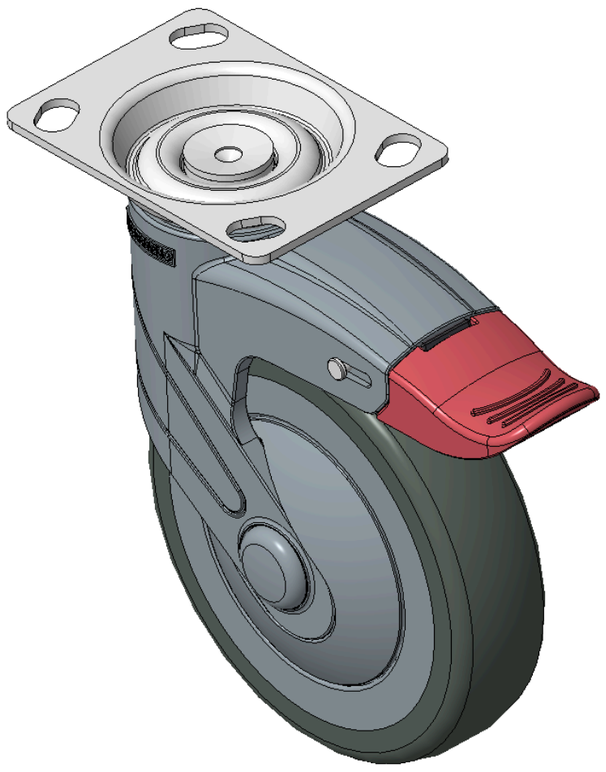

Picture may differ from original product





1155 STAT Series Caster Series (All Plastic)

Resolute (blue gray) Wheel Diameter × Wheel Width 125 x 31mm

KS-11550500454023H Copy model no.

Wheel Diameter	Load Capacity (Dynamic)	Overall Height	Wheel Bearing
125mm	100kgs	165.5mm	Wheels With Ball Bearings

- Extra-long double-brake, With locking system Casters, 74.5×49mm angled hole Top Plate
- Blue-grey polyamide legs, Zine-Plated Top Plate, Mounting Type - Top Plate device
- High-Quality Impact-Resistant Polypropylene Wheel Center, High-Quality Reinforced Polypropylene Rubber (TPR) Wheel Tread
- Dark gray, Bearing—Ball Bearings.
- Wheel tread: Thermoplastic rubber elastomer (TPR)
- Wheel Center: Made of high-quality impact-resistant polypropylene

Product descriptions are for reference only. The actual product shall prevail.

Product Data Sheet (Metric) | 3D Drawing Request

3D drawings are for members only. Please log in to download.

Product Data Sheet

Metric | Imperial

Wheel Diameter	125mm	Wheel Width	31mm
Wheel Bearing	Wheels With Ball Bearings	Plate Size	96 x 69mm
Bolt Hole Spacing	74.5 x 49mm	Plate Hole	15 x 10mm
Offset	38mm	Swivel Interference	251mm
Overall Height	165.5mm	Swivel Radius	125.5mm
Hardness Of Tread	72±5° Shore A	Load Capacity (Dynamic)	100kgs
Load Capacity (Static)	135kgs	Temperature	-20°C to +60°C
Fork Type	Swivel Caster With Total Brake	Stainless	N/A
Electrical Conductivity	N/A	Anti-Static	N/A
Weight	0.63kgs	Standard	ISO22881

* For any deviation between metric and imperial spec, please refer to the metric spec.

Performance

Rolling Smoothness
Max. 5 points Score: 5

Quiet Operation
Max. 5 points Score: 5

Floor Surface Preservation
Max. 5 points Score: 5

Downloads

PDF **1155-EN-KS2026111201.pdf**
Product Data Sheet (Metric)

3D **1155-CN-KS2026111201-d261112133317.rar**
3D drawings are for members only. Please log in to download.

Related Products



1155 STAT Series Caster Series (All Plastic)
Resolute (blue gray) Wheel Diameter × Wheel Width 125 x···
KS-11550500452043

wheel diameter	dynamic load	overall height
125 mm	90 kg	165.5 mm

View specs →

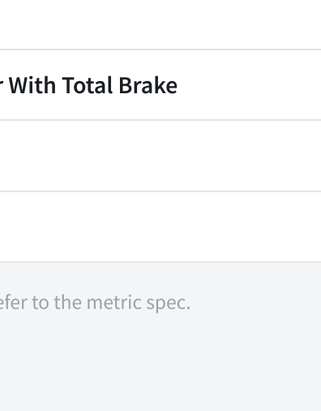

1155 STAT Series Caster Series (All Plastic)
Resolute (blue gray) Wheel Diameter × Wheel Width 125 x···
KS-11550500454063

wheel diameter	dynamic load	overall height
125 mm	100 kg	165.5 mm

View specs →

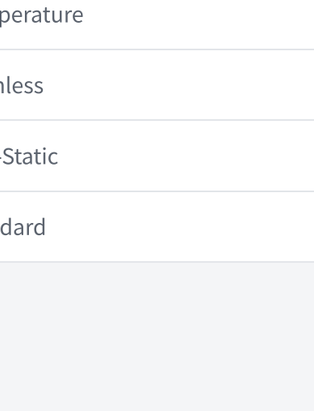

1155 STAT Series Caster Series (All Plastic)
Resolute (blue gray) Wheel Diameter × Wheel Width 125 x···
KS-11550500454073

wheel diameter	dynamic load	overall height
125 mm	90 kg	165.5 mm

View specs →

1155 STAT Series Caster Series (All Plastic)
Resolute (blue gray) Wheel Diameter × Wheel Width 125 x···
KS-11550500454193

wheel diameter	dynamic load	overall height
125 mm	100 kg	165.5 mm

View specs →