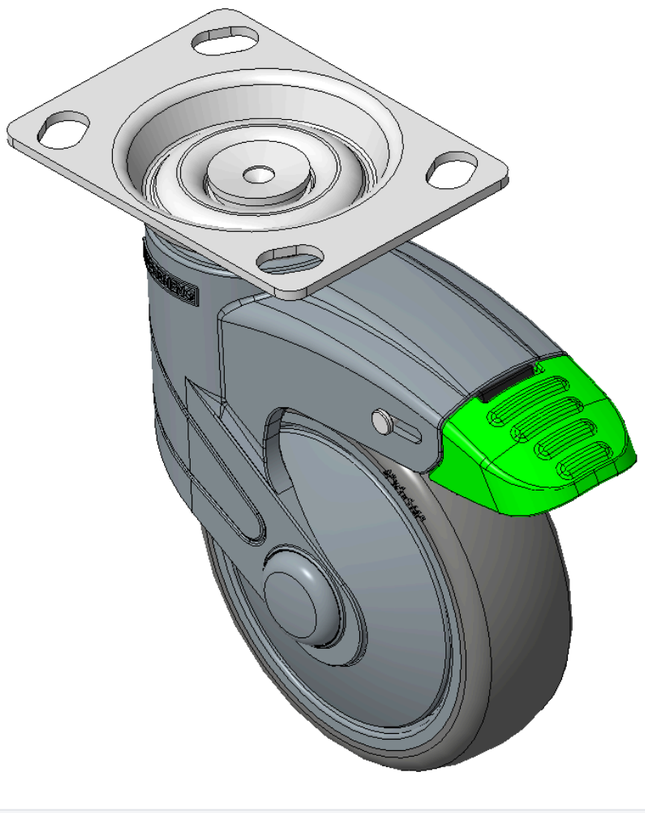

Picture may differ from original product



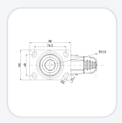

1155 STAT Series Caster Series (All Plastic)

# Classic PPR Wheel (Pearlescent Dark Gray) Wheel Diameter×Wheel Width 100×31mm

KS-11550402264333 Copy model no.

| Wheel Diameter | Load Capacity (Dynamic) | Overall Height | Wheel Bearing |
|---|---|---|---|
| 100mm | 80kgs | 141.5mm | Wheels With Ball Bearings |

- 180-degree directional long Total Brake Casters, 74.5×49mm angled hole Top Plate
- Blue-gray polyamide legs, Zine-Plated Top Plate surface, Mounting Type - Top Plate device
- High-Quality Impact-Resistant Polypropylene Wheel Center, High-Quality Reinforced Polypropylene Rubber (TPR) Wheel Tread
- Pearl dark gray, Bearing—Ball Bearings.
- Wheel tread: Thermoplastic rubber elastomer (TPR)
- Wheel Center: Made of high-quality impact-resistant polypropylene

Product descriptions are for reference only. The actual product shall prevail.

Product Data Sheet | 3D Drawing Request

3D drawings are for members only. Please log in to download.

## Product Data Sheet

Metric | Imperial

| | | | |
|---|---|---|---|
| Wheel Diameter | 100mm | Wheel Width | 31mm |
| Wheel Bearing | Wheels With Ball Bearings | Plate Size | 96 x 69mm |
| Bolt Hole Spacing | 74.5 x 49mm | Plate Hole | 15 x 10mm |
| Offset | 36mm | Swivel Interference | 220mm |
| Overall Height | 141.5mm | Swivel Radius | 110mm |
| Hardness Of Tread | 82±5° Shore A | Load Capacity (Dynamic) | 80kgs |
| Load Capacity (Static) | 135kgs | Temperature | -20°C to +60°C |
| Fork Type | Swivel Caster With Total Brake | Stainless | N/A |
| Electrical Conductivity | N/A | Anti-Static | N/A |
| Weight | 0.63kgs | Standard | ISO22881 |

* For any deviation between metric and imperial spec, please refer to the metric spec.

## Performance

**Rolling Smoothness**
Max. 5 points Score: 4

**Quiet Operation**
Max. 5 points Score: 4

**Floor Surface Preservation**
Max. 5 points Score: 5

## Downloads

PDF **1155-EN-KS2026111308.pdf**
Product Data Sheet

3D **1155-CN-KS2026111308-d261113145031.rar**
3D drawings are for members only. Please log in to download.

## Related Products

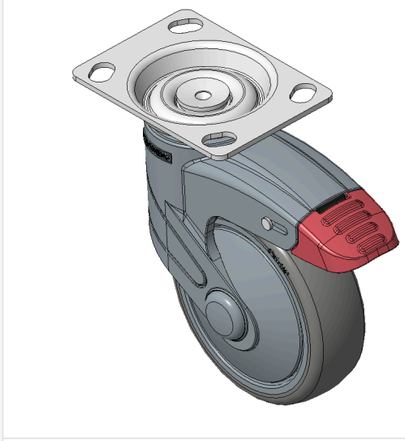

1155 STAT Series Caster Series (All Plastic)
**Classic PPR Wheel (Pearlescent Dark Gray) Wheel Diameter×Whe…**
KS-11550402264053

| wheel diameter | dynamic load | overall height |
|---|---|---|
| 100 mm | 80 kg | 141.5 mm |

View specs →

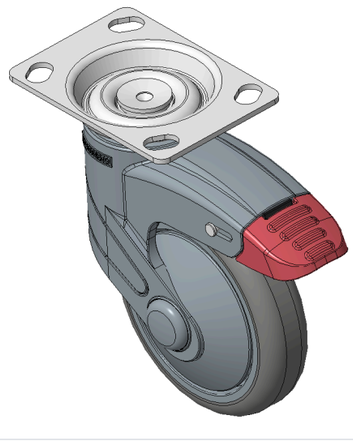

1155 STAT Series Caster Series (All Plastic)
**Classic PPR Wheel (Pearlescent Dark Gray) Wheel Diameter×Whe…**
KS-11550402264063

| wheel diameter | dynamic load | overall height |
|---|---|---|
| 100 mm | 80 kg | 141.5 mm |

View specs →

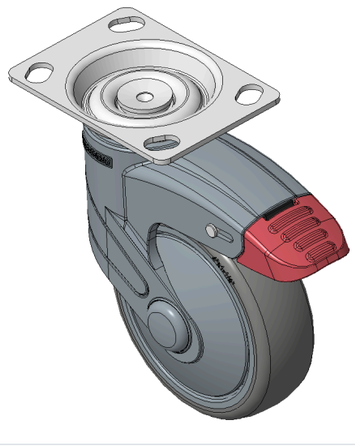

1155 STAT Series Caster Series (All Plastic)
**Classic PPR Wheel (Pearlescent Dark Gray) Wheel Diameter×Whe…**
KS-11550402264313

| wheel diameter | dynamic load | overall height |
|---|---|---|
| 100 mm | 80 kg | 141.5 mm |

View specs →

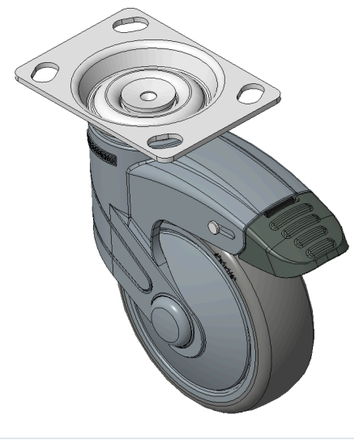

1155 STAT Series Caster Series (All Plastic)
**Classic PPR Wheel (Pearlescent Dark Gray) Wheel Diameter×Whe…**
KS-11550402264323

| wheel diameter | dynamic load | overall height |
|---|---|---|
| 100 mm | 80 kg | 141.5 mm |

View specs →