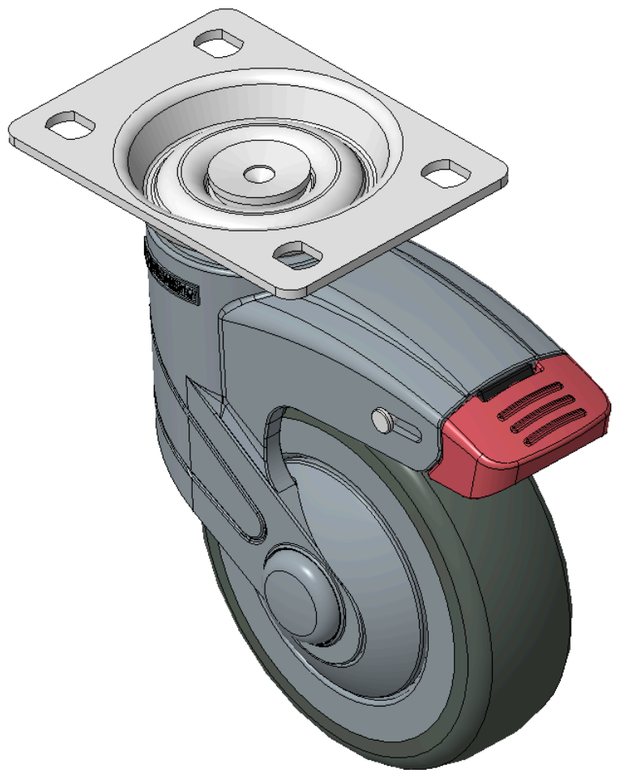

Picture may differ from original product



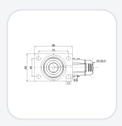

1155 STAT Series Caster Series (All Plastic)

# PPR (Blue-Grey) Wheel Diameter × Wheel Width 100 x 31mm

KS-11550400264413 Copy model no.

| Wheel Diameter | Load Capacity (Dynamic) | Overall Height | Wheel Bearing |
|---|---|---|---|
| 100mm | 90kgs | 141.5mm | Wheel With Plain Bearing |

- Short Total Brake Casters, 75×45mm perforated Top Plate
- Blue-gray polyamide legs, Zine-Plated Top Plate, Mounting Type - Top Plate device
- High-Quality Impact-Resistant Polypropylene Wheel Center, High-Quality Reinforced Polypropylene Rubber (TPR) Wheel Tread
- Dark gray, Bearing—Plain Bearing, with Dust Cap.
- Wheel tread: Thermoplastic rubber elastomer (TPR)
- Wheel Center: Made of high-quality impact-resistant polypropylene

Product descriptions are for reference only. The actual product shall prevail.

3D Drawing Request

3D drawings are for members only. Please log in to download.

## Product Data Sheet

Metric | Imperial

| | | | |
|---|---|---|---|
| Wheel Diameter | 100mm | Wheel Width | 31mm |
| Wheel Bearing | Wheel With Plain Bearing | Plate Size | 96 x 69mm |
| Bolt Hole Spacing | 75 x 45mm | Plate Hole | 11 x 8.6mm |
| Offset | 36mm | Swivel Interference | 201mm |
| Overall Height | 141.5mm | Swivel Radius | 100.5mm |
| Hardness Of Tread | 82±5° Shore A | Load Capacity (Dynamic) | 90kgs |
| Load Capacity (Static) | 135kgs | Temperature | -20°C to +60°C |
| Fork Type | Swivel Caster With Total Brake | Stainless | N/A |
| Electrical Conductivity | N/A | Anti-Static | N/A |
| Weight | 0.63kgs | Standard | ISO22881 |

* For any deviation between metric and imperial spec, please refer to the metric spec.

## Performance

**Rolling Smoothness**
Max. 5 points Score: 4

**Quiet Operation**
Max. 5 points Score: 4

**Floor Surface Preservation**
Max. 5 points Score: 5

## Downloads

3D **1155-CN-KS2026111605-d261116144514.rar**
3D drawings are for members only. Please log in to download. ›

## Related Products

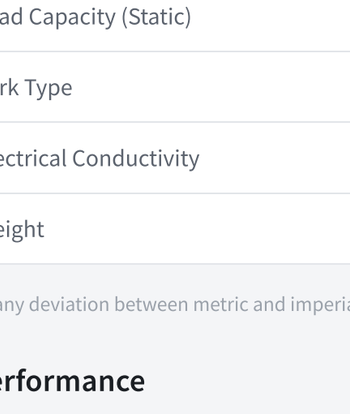

1155 STAT Series Caster Series (All Plastic)
**PPR (Blue-Grey) Wheel Diameter × Wheel Width 100 x 31mm**
KS-11550400264053
wheel diameter 100 mm | dynamic load 90 kg | overall height 141.5 mm
View specs →

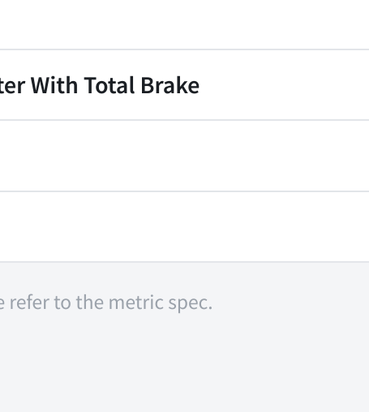

1155 STAT Series Caster Series (All Plastic)
**PPR (Blue-Grey) Wheel Diameter × Wheel Width 100 x 31mm**
KS-11550400264053H
wheel diameter 100 mm | dynamic load 90 kg | overall height 141.5 mm
View specs →

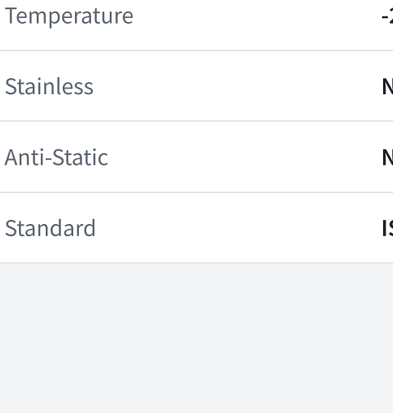

1155 STAT Series Caster Series (All Plastic)
**PPR (Blue-Grey) Wheel Diameter × Wheel Width 100 x 31mm**
KS-11550400264093
wheel diameter 100 mm | dynamic load 90 kg | overall height 141.5 mm
View specs →



1155 STAT Series Caster Series (All Plastic)
**PPR (Blue-Grey) Wheel Diameter × Wheel Width 100 x 31mm**
KS-11550400264243
wheel diameter 100 mm | dynamic load 90 kg | overall height 141.5 mm
View specs →