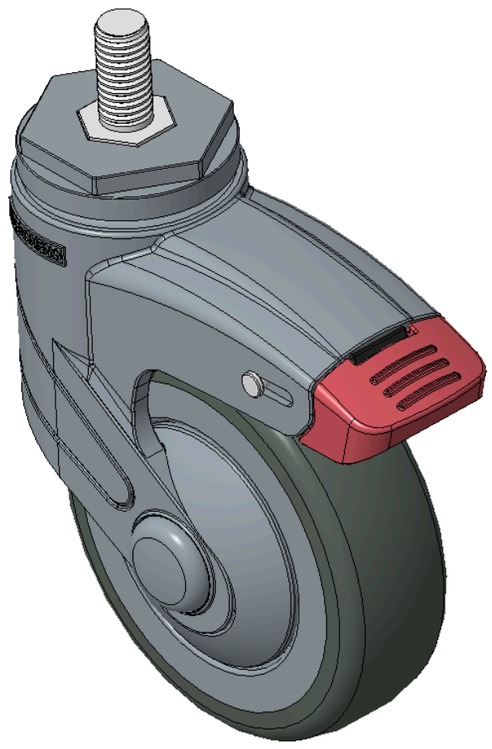

Picture may differ from original product



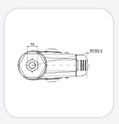

1155 STAT Series Caster Series (All Plastic)

PPR (Blue-Grey) Wheel Diameter × Wheel Width 100 x 31mm

KS-11550400266513 Copy model no.

Wheel Diameter	Load Capacity (Dynamic)	Overall Height	Wheel Bearing
100mm	90kgs	139mm	Wheel With Plain Bearing

- Short double-brake With locking system Casters, Threaded Stem M12x25
- Blue-gray legs made of polyamide reinforcement, Threaded Stem installation
- Rust-proof, Corrosion resistant, Attractive appearance, Economical, and Smooth rotation
- High-Quality Impact-Resistant Polypropylene Wheel Center, High-Quality Reinforced Polypropylene Rubber (TPR) Wheel Tread
- Dark gray, Bearing—Plain Bearing, with Dust Cap
- Wheel tread: Thermoplastic rubber elastomer (TPR)
- Wheel Center: Made of high-quality impact-resistant polypropylene

Product descriptions are for reference only. The actual product shall prevail.

3D Drawing Request

3D drawings are for members only. Please log in to download.

Product Data Sheet

Metric | Imperial

Wheel Diameter	100mm	Wheel Width	31mm
Wheel Bearing	Wheel With Plain Bearing	Threaded Stem	M12×P1.75
Threaded Length	25mm	Offset	36mm
Swivel Interference	201mm	Overall Height	139mm
Swivel Radius	100.5mm	Hardness Of Tread	82±5° Shore A
Load Capacity (Dynamic)	90kgs	Load Capacity (Static)	135kgs
Temperature	-20°C to +60°C	Fork Type	Swivel Caster With Total Brake
Stainless	N/A	Electrical Conductivity	N/A
Anti-Static	N/A	Weight	0.64kgs
Standard	ISO22881		

* For any deviation between metric and imperial spec, please refer to the metric spec.

Performance

Rolling Smoothness
Max. 5 points Score: 4

Quiet Operation
Max. 5 points Score: 4

Floor Surface Preservation
Max. 5 points Score: 5

Downloads

3D **1155-CN-KS2026111611-d261116160934.rar**
3D drawings are for members only. Please log in to download. ›

Related Products

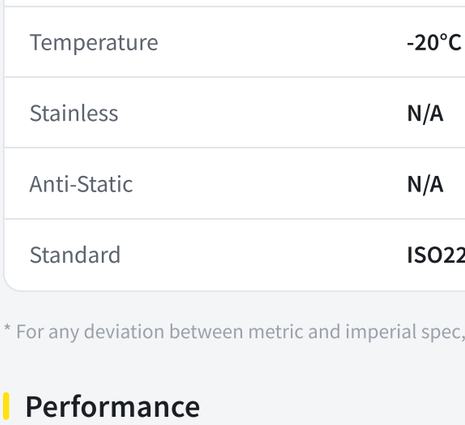

1155 STAT Series Caster Series (All Plastic)

PPR (Blue-Grey) Wheel Diameter × Wheel Width 100 x 31mm

KS-11550400266053

wheel diameter	dynamic load	overall height
100 mm	90 kg	139 mm

View specs →



1155 STAT Series Caster Series (All Plastic)

PPR (Blue-Grey) Wheel Diameter × Wheel Width 100 x 31mm

KS-11550400266053H

wheel diameter	dynamic load	overall height
100 mm	90 kg	139 mm

View specs →

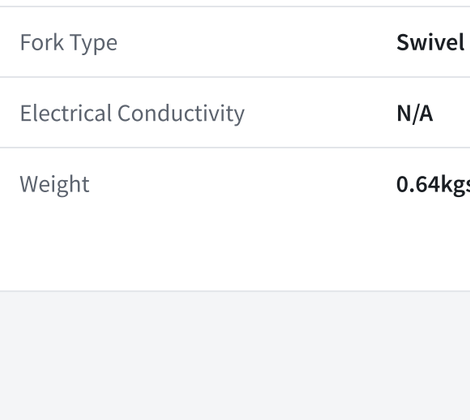

1155 STAT Series Caster Series (All Plastic)

PPR (Blue-Grey) Wheel Diameter × Wheel Width 100 x 31mm

KS-11550400266093

wheel diameter	dynamic load	overall height
100 mm	90 kg	139 mm

View specs →

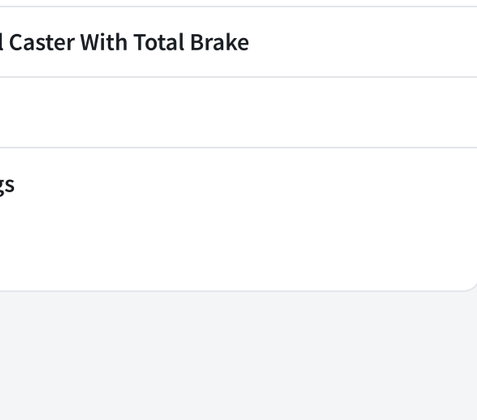

1155 STAT Series Caster Series (All Plastic)

PPR (Blue-Grey) Wheel Diameter × Wheel Width 100 x 31mm

KS-11550400266413

wheel diameter	dynamic load	overall height
100 mm	90 kg	139 mm

View specs →