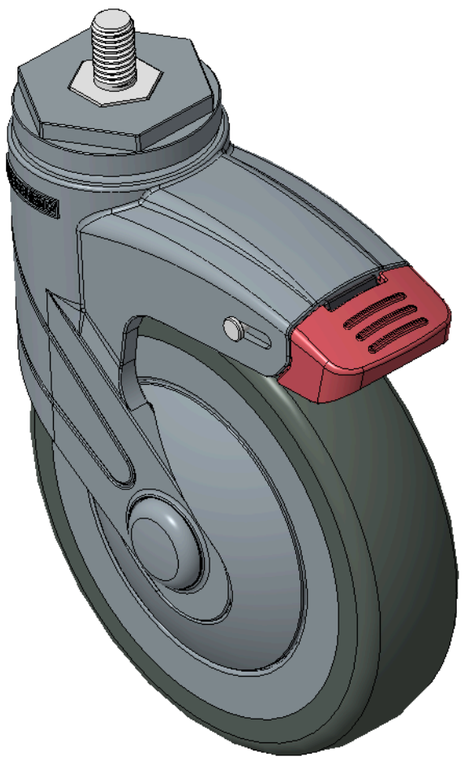

Picture may differ from original product



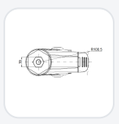

1155 STAT Series Caster Series (All Plastic)

# PPR Wheel (Blue Gray) Wheel Diameter×Wheel Width 125×31mm

KS-11550500266423 Copy model no.

| Wheel Diameter | Load Capacity (Dynamic) | Overall Height | Wheel Bearing |
|---|---|---|---|
| 125mm | 100kgs | 164mm | Wheel With Plain Bearing |

- Short double-brake With locking system Casters, Threaded Stem M10x17
- Blue-gray legs made of polyamide reinforcement, Threaded Stem installation
- Rust-proof, Corrosion resistant, Attractive appearance, Economical, and Smooth rotation
- High-Quality Impact-Resistant Polypropylene Wheel Center, High-Quality Reinforced Polypropylene Rubber (TPR) Wheel Tread
- Dark gray, Bearing—Plain Bearing, with Dust Cap
- Wheel tread: Thermoplastic rubber elastomer (TPR)
- Wheel Center: Made of high-quality impact-resistant polypropylene

Product descriptions are for reference only. The actual product shall prevail.

3D Drawing Request

3D drawings are for members only. Please log in to download.

## Product Data Sheet

Metric | Imperial

| | | | |
|---|---|---|---|
| Wheel Diameter | 125mm | Wheel Width | 31mm |
| Wheel Bearing | Wheel With Plain Bearing | Threaded Stem | M10×P1.5 |
| Threaded Length | 17mm | Offset | 38mm |
| Swivel Interference | 201mm | Overall Height | 164mm |
| Swivel Radius | 100.5mm | Hardness Of Tread | 82±5° Shore A |
| Load Capacity (Dynamic) | 100kgs | Load Capacity (Static) | 135kgs |
| Temperature | -20°C to +60°C | Fork Type | Swivel Caster With Total Brake |
| Stainless | N/A | Electrical Conductivity | N/A |
| Anti-Static | N/A | Weight | 0.64kgs |
| Standard | ISO22881 | | |

* For any deviation between metric and imperial spec, please refer to the metric spec.

## Performance

**Rolling Smoothness**
Max. 5 points Score: 4

**Quiet Operation**
Max. 5 points Score: 4

**Floor Surface Preservation**
Max. 5 points Score: 5

## Downloads

3D **1155-CN-KS2026111713-d261117104525.rar**
3D drawings are for members only. Please log in to download. ›

## Related Products

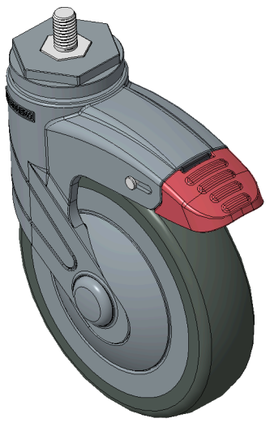

1155 STAT Series Caster Series (All Plastic)

**PPR Wheel (Blue Gray) Wheel Diameter×Wheel Width···**

KS-11550500266073

| wheel diameter | dynamic load | overall height |
|---|---|---|
| 125 mm | 90 kg | 164 mm |

View specs →

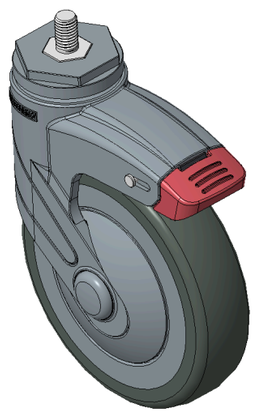

1155 STAT Series Caster Series (All Plastic)

**PPR Wheel (Blue Gray) Wheel Diameter×Wheel Width···**

KS-11550500266023

| wheel diameter | dynamic load | overall height |
|---|---|---|
| 125 mm | 100 kg | 164 mm |

View specs →