# 1102 B Type Caster Series

Nylon Wheel Diameter × Wheel Width 100 x 32mm

EAN

KS-11020400071011

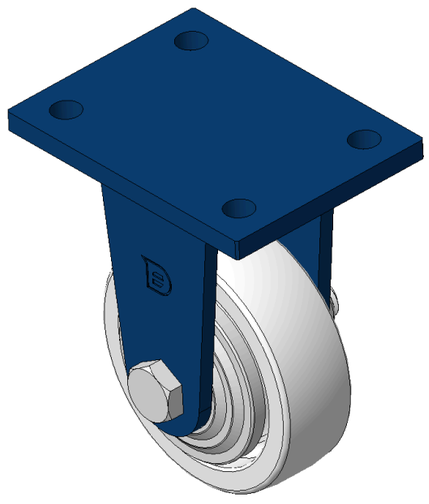

Picture may differ from original product

Drawings are for reference only and may differ from the product

## Technical Data

◉ Imperial ○ Metric

| | |
|---|---|
| Wheel Diameter | 4 " |
| Wheel Width | 1-5/16 " |
| Wheel Bearing | Wheels With Ball Bearings |
| Plate Size | 4-13/16 " x 3-9/16 " |
| Bolt Hole Spacing | 3-9/16 " x 2-7/16 " |
| Plate Hole | 1/2 " |
| Overall Height | 5-7/8 " |
| Hardness Of Tread | 75±5° Shore D |
| Load Capacity (Dynamic) | 551lbs |
| Load Capacity (Static) | 827lbs |
| Temperature | -4°F to +176°F |
| Fork Type | Rigid Caster |
| Stainless | N/A |
| Electrical Conductivity | N/A |
| Anti-Static | N/A |
| Weight | 3.6lbs |
| Standard | ISO22883 |

## Advantages at a glance

| | |
|---|---|
| Rolling Resistance | ●●●●● |
| Operating Noise | ●●○○○ |
| Floor Surface Preservation | ●●○○○ |

## Dimensions

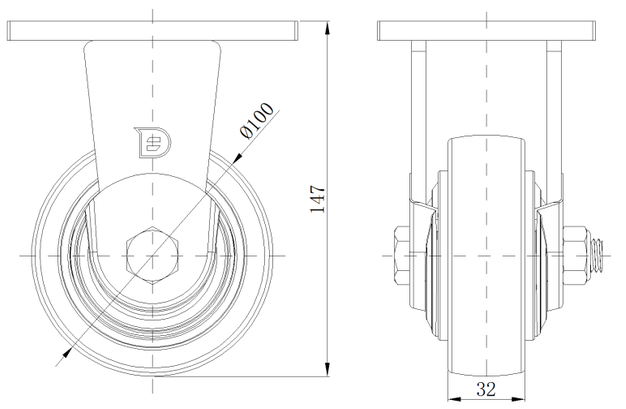


## Mounting

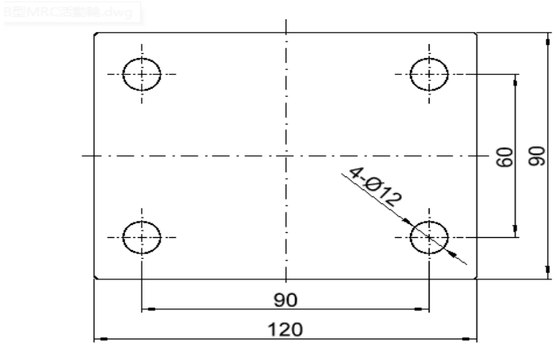


* For any deviation between metric and imperial spec, please refer to the metric spec.

© Copyright 2026 DershengInternational www.dersheng.com