1110-3 Series — Medi Series

PPR Wheel Hub (Matte Black) Wheel Diameter×Wheel Width 75×12mm

EAN

KS-11100302267033

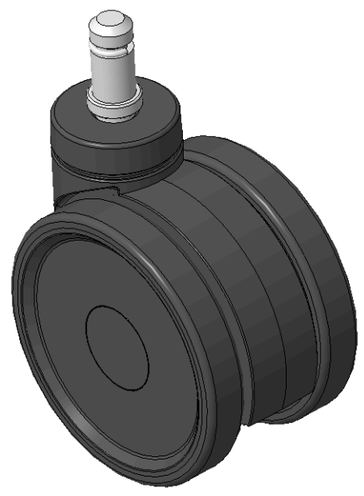

Picture may differ from original product

Drawings are for reference only and may differ from the product

Technical Data

◉ Metric ○ Imperial

Wheel Diameter	75mm
Wheel Width	50.5mm
Wheel Bearing	Wheel With Plain Bearing
Threaded Stem	Ø11
Threaded Length	22mm
Offset	22mm
Swivel Interference	132mm
Overall Height	93.5mm
Swivel Radius	66mm
Hardness Of Tread	82±5° Shore A
Load Capacity (Dynamic)	30kgs
Load Capacity (Static)	45kgs
Temperature	-20°C to +60°C
Fork Type	Swivel Caster
Stainless	N/A
Electrical Conductivity	N/A
Anti-Static	N/A
Weight	0.16kgs
Standard	ISO22881

Advantages at a glance

Rolling Resistance	● ● ● ● ○
Operating Noise	● ● ● ● ○
Floor Surface Preservation	● ● ● ● ●

Dimensions

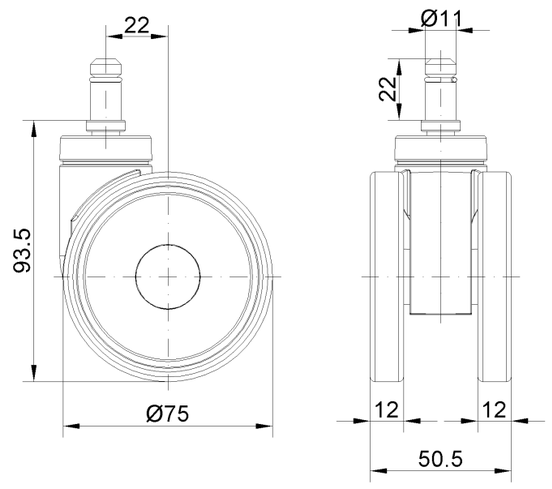

Mounting

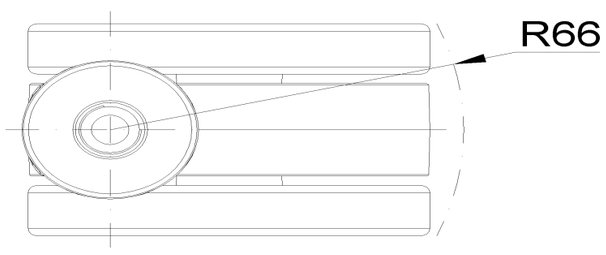

* For any deviation between metric and imperial spec, please refer to the metric spec.

© Copyright 2026 DershengInternational www.dersheng.com