Product Data Sheet

# 1112-1 2" Wide General Purposes Caster Series

EQPU (brown round) Wheel Diameter x Wheel Width 125 x 50mm

A

KS-11120601554021

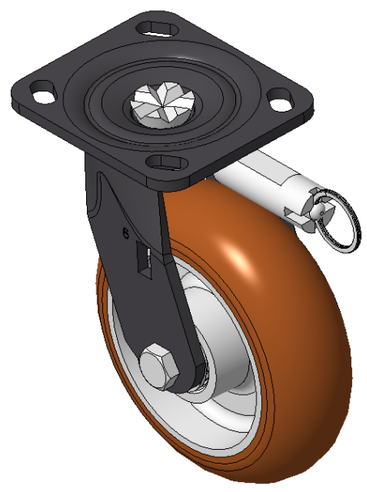

Picture may differ from original product

Directional brake Casters, Welded Caster Fork, black paint finish
Base plate Mounting Type device, 85x70mm Bolt Hole Spacing
Cast Iron Wheel Center, High Quality Polyurethane Wheel Tread, Cast Iron brown
Bearings—Ball Bearings

Wheel Tread: Hhigh-Quality Polyurethane
Wheel Center: Iron core / Cast iron core

Drawings are for reference only and may differ from the product

## Technical Data

◉ Imperial ○ Metric

| | |
|---|---|
| Wheel Diameter | 5 " |
| Wheel Width | 2 " |
| Wheel Bearing | Wheels With Ball Bearings |
| Plate Size | 4-9/16 " x 4 " |
| Bolt Hole Spacing | 3-3/8 " x 2-3/4 " |
| Plate Hole | 13/16 " x 3/8 " |
| Offset | 1-3/16 " |
| Swivel Interference | 12-1/8 " |
| Overall Height | 6-5/8 " |
| Swivel Radius | 6-1/16 " |
| Hardness Of Tread | 92±5° Shore A |
| Load Capacity (Dynamic) | 992lbs |
| Load Capacity (Static) | 1488lbs |
| Temperature | -4°F to +158°F |
| Fork Type | Swivel Caster With Directional Lock |
| Stainless | N/A |
| Electrical Conductivity | N/A |
| Anti-Static | N/A |
| Weight | 7.7lbs |
| Standard | ISO22883 |

## Advantages at a glance

| | |
|---|---|
| Rolling Resistance | ● ● ● ● ● |
| Operating Noise | ● ● ● ● ● |
| Floor Surface Preservation | ● ● ● ● ● |

## Dimensions

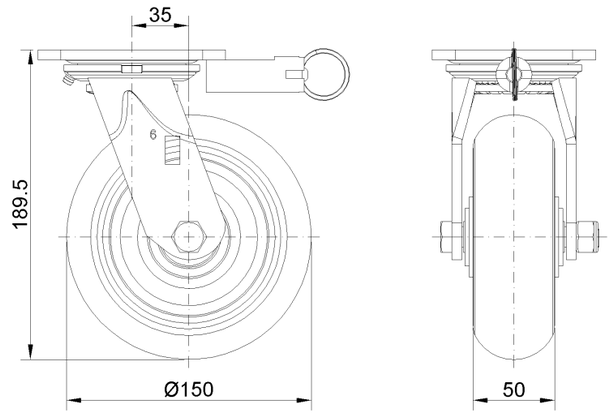


## Mounting

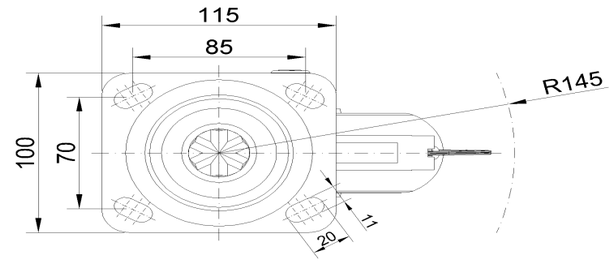


* For any deviation between metric and imperial spec, please refer to the metric spec.

© Copyright 2026 DershengInternational www.dersheng.com