Product Data Sheet

1115 Spring-loaded Caster Series (Regular)

PU (Red round) Wheel Diameter × Wheel Width 125 x 40mm

EAN

KS-11150500332261

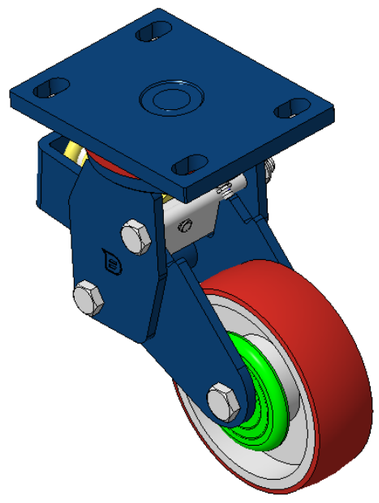

Picture may differ from original product

Spring-loaded Caster with Welded Caster Fork
Blue painted finish, Mounting Type - Top Plate, 110x75 Bolt Hole Spacing
Cast Iron core with High Quality Polyurethane Wheel Tread, Cast Iron red
Bearings—Ball Bearings

Wheel tread: Made of high-quality polyurethane

Wheel Center: iron core/cast iron core

Drawings are for reference only and may differ from the product

Technical Data

◉ Metric ○ Imperial

Wheel Diameter	125mm
Wheel Width	40mm
Wheel Bearing	Wheels With Ball Bearings
Plate Size	140 x 110mm
Bolt Hole Spacing	110x75mm
Plate Hole	22 x 13mm
Offset	66.3mm
Swivel Interference	264mm
Overall Height	212.5mm
Swivel Radius	132mm
Hardness Of Tread	92±5° Shore A
Load Capacity (Dynamic)	200kgs
Load Capacity (Static)	300kgs
Temperature	-20°C to +70°C
Fork Type	Swivel Caster
Stainless	N/A
Electrical Conductivity	N/A
Anti-Static	N/A
Weight	5.75kgs
Standard	ISO22883

Advantages at a glance

Rolling Resistance	● ● ● ○ ○
Operating Noise	● ● ● ● ○
Floor Surface Preservation	● ● ● ● ○

Dimensions

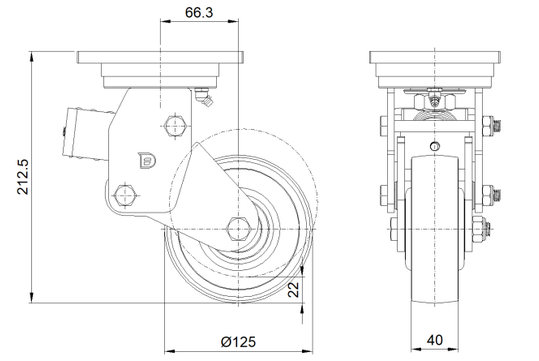

Mounting

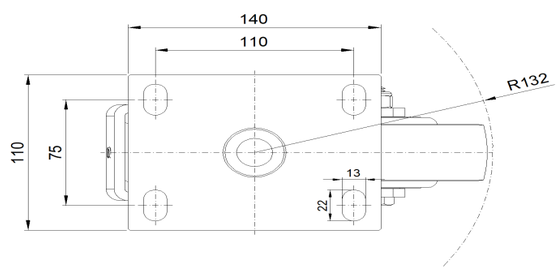

* For any deviation between metric and imperial spec, please refer to the metric spec.

© Copyright 2025 DershengInternational www.dersheng.com