Product Data Sheet

1115 Spring-loaded Caster Series (Regular)

PU (Red round) Wheel Diameter × Wheel Width 125 x 40mm

EAN

KS-11150500332261

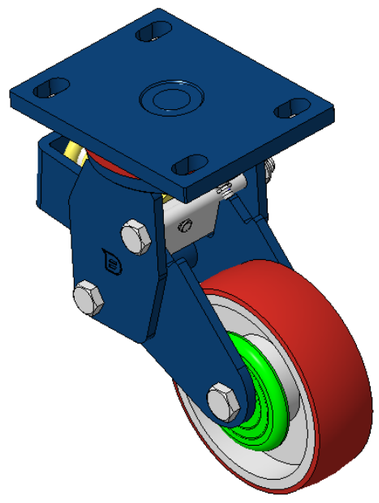

Picture may differ from original product

Spring-loaded Caster with Welded Caster Fork
Blue painted finish, Mounting Type - Top Plate, 110x75 Bolt Hole Spacing
Cast Iron core with High Quality Polyurethane Wheel Tread, Cast Iron red
Bearings—Ball Bearings

Wheel tread: Made of high-quality polyurethane

Wheel Center: iron core/cast iron core

Drawings are for reference only and may differ from the product

Technical Data

◉ Imperial ○ Metric

Wheel Diameter	5 "
Wheel Width	1-5/8 "
Wheel Bearing	Wheels With Ball Bearings
Plate Size	5-9/16 " x 4-3/8 "
Bolt Hole Spacing	4-5/16 " x3”
Plate Hole	7/8 " x 9/16 "
Offset	2-5/8 "
Swivel Interference	10-1/2 "
Overall Height	8-1/2 "
Swivel Radius	5-1/4 "
Hardness Of Tread	92±5° Shore A
Load Capacity (Dynamic)	441lbs
Load Capacity (Static)	661lbs
Temperature	-4°F to +158°F
Fork Type	Swivel Caster
Stainless	N/A
Electrical Conductivity	N/A
Anti-Static	N/A
Weight	12.7lbs
Standard	ISO22883

Advantages at a glance

Rolling Resistance	● ● ● ○ ○
Operating Noise	● ● ● ● ○
Floor Surface Preservation	● ● ● ● ○

Dimensions

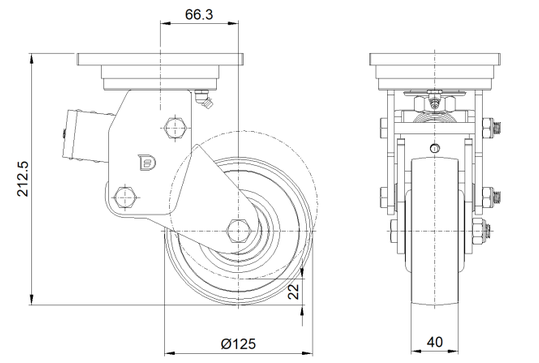

Mounting

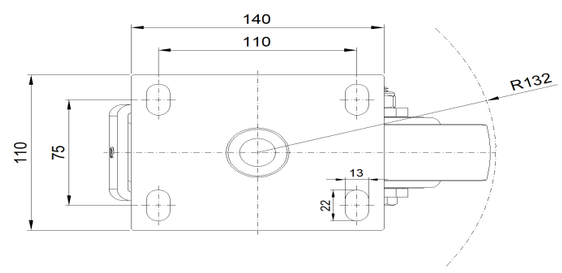

* For any deviation between metric and imperial spec, please refer to the metric spec.

© Copyright 2025 DershengInternational www.dersheng.com