Product Data Sheet

1141 Kingpinless Caster Series

CPD Wheel Diameter × Wheel Width 100 x 32mm

EAN

KS-11410400294123

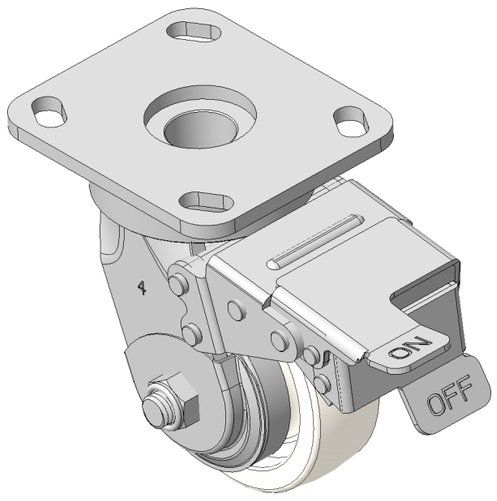

Picture may differ from original product

Equipped with front brake, locking Casters, Welded Caster Fork.
Zine-Plated surface, Mounting Type - Top Plate, 85x70mm Bolt Hole Spacing.
Polypropylene Wheel Center, natural wheel finish.
Ball Bearing bearings, with specially designed anti-winding wheel covers.

Wheel surface: PP polypropylene

Wheel Center: PP polypropylene

Drawings are for reference only and may differ from the product

Technical Data

◉ Imperial ○ Metric

Wheel Diameter	4 "
Wheel Width	1-5/16 "
Wheel Bearing	Wheels With Ball Bearings
Plate Size	4-9/16 " x 4 "
Bolt Hole Spacing	3-3/8 " x 2-3/4 "
Plate Hole	13/16 " x 3/8 "
Offset	1-1/16 "
Swivel Interference	11-1/2 "
Overall Height	5-5/8 "
Swivel Radius	5-3/4 "
Hardness Of Tread	72±5° Shore D
Load Capacity (Dynamic)	441lbs
Load Capacity (Static)	661lbs
Temperature	4°F to +140°F
Fork Type	Swivel Caster With Front Brake
Stainless	N/A
Electrical Conductivity	N/A
Anti-Static	N/A
Weight	3.9lbs
Standard	ISO22883

Advantages at a glance

Rolling Resistance	● ● ● ● ●
Operating Noise	● ● ● ○ ○
Floor Surface Preservation	● ● ● ○ ○

Dimensions

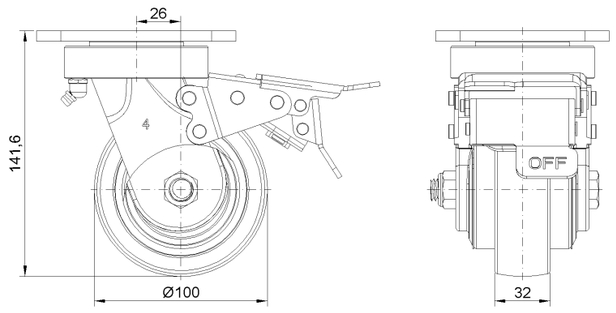

Mounting

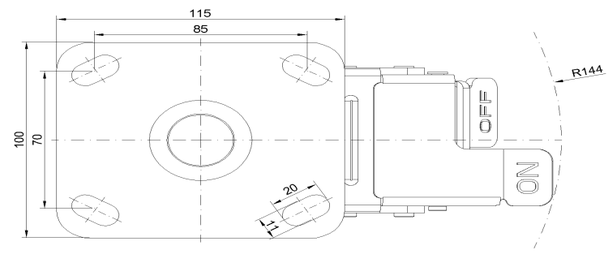

* For any deviation between metric and imperial spec, please refer to the metric spec.

© Copyright 2026 DershengInternational www.dersheng.com