Product Data Sheet

# 1141 Kingpinless Caster Series

QPU (Brown round) Wheel Diameter × Wheel Width 125 x 40mm

EAN

KS-11410500532133

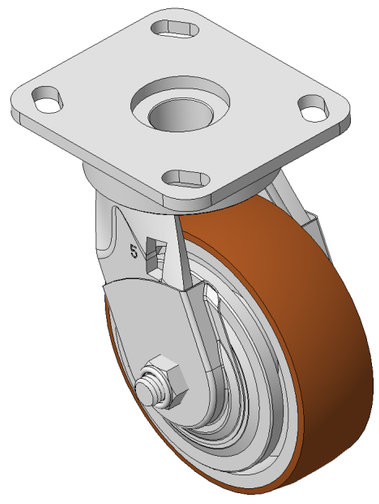

Picture may differ from original product

Portable Casters, Welded Caster Fork
Zine-Plated surface, Mounting Type - Top Plate device, 85x70mm Bolt Hole Spacing
Cast Iron Wheel Center, High Quality Polyurethane Wheel Tread, Cast Iron brown
Bearings—Ball Bearings, equipped with special anti-winding wheel covers

Wheel Tread: Hhigh-Quality Polyurethane

Wheel Center: Iron core / Cast iron core

Drawings are for reference only and may differ from the product

## Technical Data

◉ Imperial ○ Metric

| | |
|---|---|
| Wheel Diameter | 5 " |
| Wheel Width | 1-5/8 " |
| Wheel Bearing | Wheels With Ball Bearings |
| Plate Size | 4-9/16 " x 4 " |
| Bolt Hole Spacing | 3-3/8 " x 2-3/4 " |
| Plate Hole | 13/16 " x 3/8 " |
| Offset | 1-3/16 " |
| Swivel Interference | 7-9/16 " |
| Overall Height | 6-5/8 " |
| Swivel Radius | 3-13/16 " |
| Hardness Of Tread | 92±5° Shore A |
| Load Capacity (Dynamic) | 992lbs |
| Load Capacity (Static) | 1488lbs |
| Temperature | -4°F to +158°F |
| Fork Type | Swivel Caster |
| Stainless | N/A |
| Electrical Conductivity | N/A |
| Anti-Static | N/A |
| Weight | 6.1lbs |
| Standard | ISO22883 |

## Advantages at a glance

| | |
|---|---|
| Rolling Resistance | ● ● ● ● ● |
| Operating Noise | ● ● ● ● ● |
| Floor Surface Preservation | ● ● ● ● ● |

## Dimensions

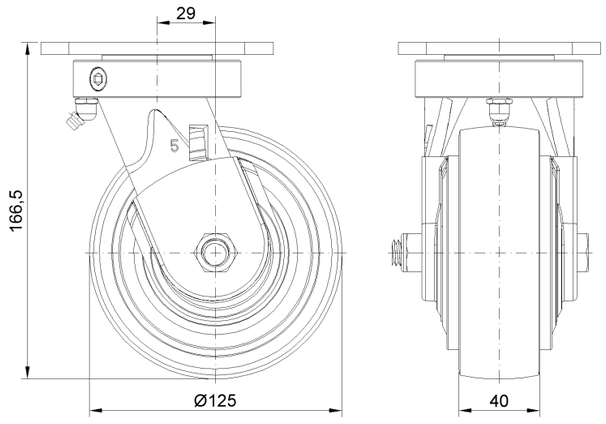


## Mounting

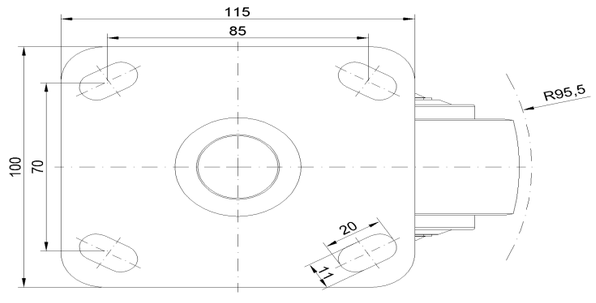


* For any deviation between metric and imperial spec, please refer to the metric spec.

© Copyright 2026 DershengInternational www.dersheng.com