Product Data Sheet

# 1141 Kingpinless Caster Series

QPU (Brown round) Wheel Diameter × Wheel Width 125 x 40mm

EAN

KS-11410500533133

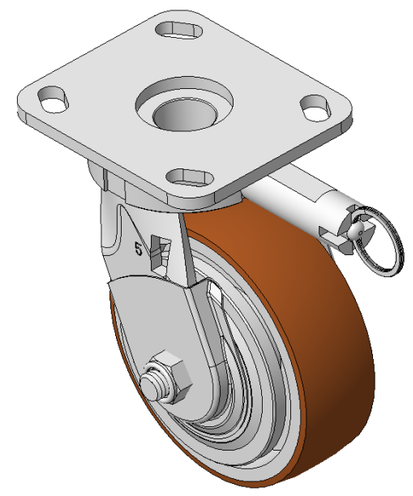

Picture may differ from original product

Casters with directional brake and With locking system, Welded Caster Fork
Zine-Plated, Mounting Type - Top Plate, 85x70 Bolt Hole Spacing
Cast Iron Wheel Center, High Quality Polyurethane Wheel Tread, Cast Iron brown
Bearings—Ball Bearings with special Anti-thread wheel cover

Wheel tread: Made of high-quality polyurethane

Wheel Center: iron core/cast iron core

Drawings are for reference only and may differ from the product

## Technical Data

◉ Metric ○ Imperial

| | |
|---|---|
| Wheel Diameter | 125mm |
| Wheel Width | 40mm |
| Wheel Bearing | Wheels With Ball Bearings |
| Plate Size | 115 x 100mm |
| Bolt Hole Spacing | 85 x 70mm |
| Plate Hole | 20 x 11mm |
| Offset | 29mm |
| Swivel Interference | 286mm |
| Overall Height | 166.5mm |
| Swivel Radius | 143mm |
| Hardness Of Tread | 92±5° Shore A |
| Load Capacity (Dynamic) | 450kgs |
| Load Capacity (Static) | 675kgs |
| Temperature | -20°C to +70°C |
| Fork Type | Swivel Caster With Directional Lock |
| Stainless | N/A |
| Electrical Conductivity | N/A |
| Anti-Static | N/A |
| Weight | 3.11kgs |
| Standard | ISO22883 |

## Advantages at a glance

| | |
|---|---|
| Rolling Resistance | ● ● ● ● ● |
| Operating Noise | ● ● ● ● ● |
| Floor Surface Preservation | ● ● ● ● ● |

## Dimensions

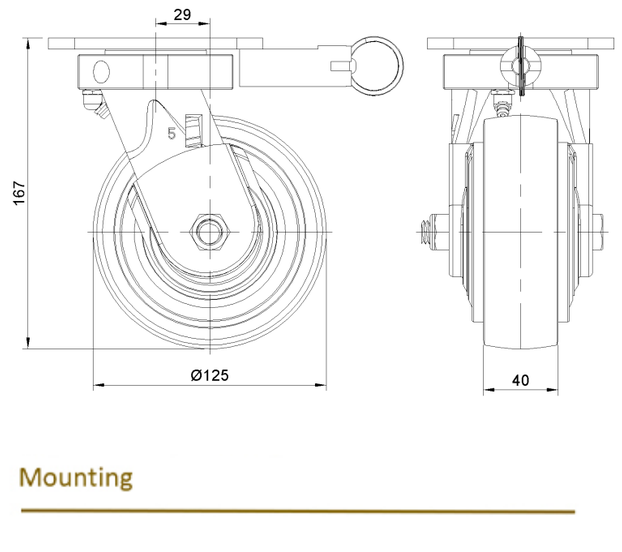


## Mounting

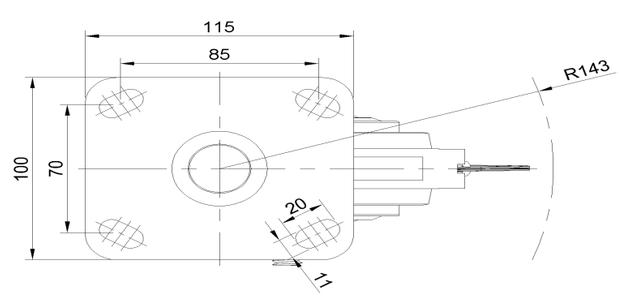


* For any deviation between metric and imperial spec, please refer to the metric spec.

© Copyright 2025 DershengInternational www.dersheng.com