# 1141 Kingpinless Caster Series

QPU (Brown round) Wheel Diameter × Wheel Width 150 x 42mm

EAN

KS-11410600532123

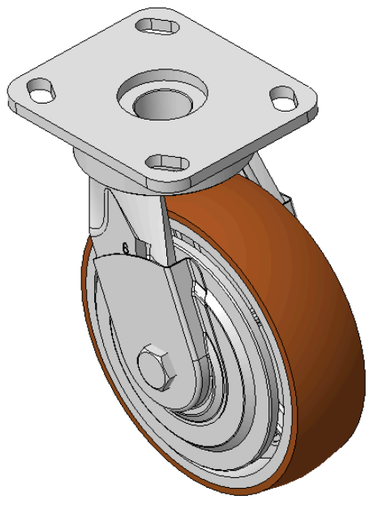

Picture may differ from original product

Drawings are for reference only and may differ from the product

## Technical Data

◉ Metric ○ Imperial

| | |
|---|---|
| Wheel Diameter | 150mm |
| Wheel Width | 42mm |
| Wheel Bearing | Wheels With Ball Bearings |
| Plate Size | 115 x 100mm |
| Bolt Hole Spacing | 85 x 70mm |
| Plate Hole | 20 x 11mm |
| Offset | 33.3mm |
| Swivel Interference | 222mm |
| Overall Height | 189mm |
| Swivel Radius | 111mm |
| Hardness Of Tread | 92±5° Shore A |
| Load Capacity (Dynamic) | 550kgs |
| Load Capacity (Static) | 825kgs |
| Temperature | -20°C to +70°C |
| Fork Type | Swivel Caster |
| Stainless | N/A |
| Electrical Conductivity | N/A |
| Anti-Static | N/A |
| Weight | 3.56kgs |
| Standard | ISO22883 |

## Advantages at a glance

| | |
|---|---|
| Rolling Resistance | ●●●●● |
| Operating Noise | ●●●●● |
| Floor Surface Preservation | ●●●●● |

## Dimensions

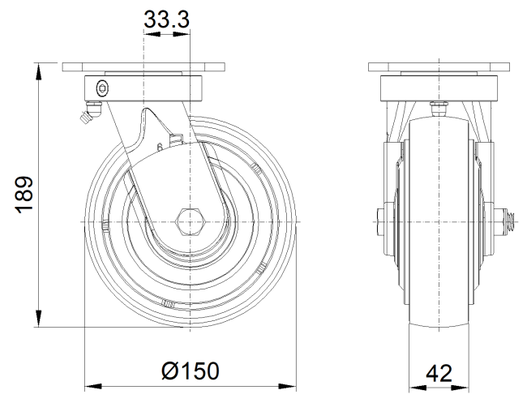


## Mounting

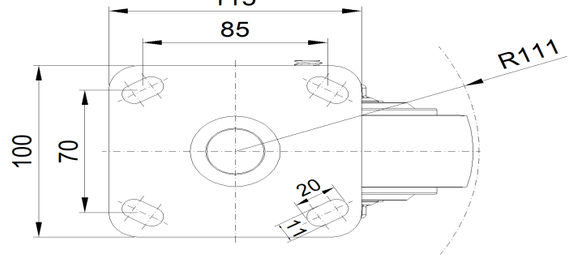


* For any deviation between metric and imperial spec, please refer to the metric spec.

© Copyright 2026 DershengInternational www.dersheng.com