Product Data Sheet

1141 Kingpinless Caster Series

CPD Wheel Diameter x Wheel Width 200 x 50mm

EAN

KS-11410800294121

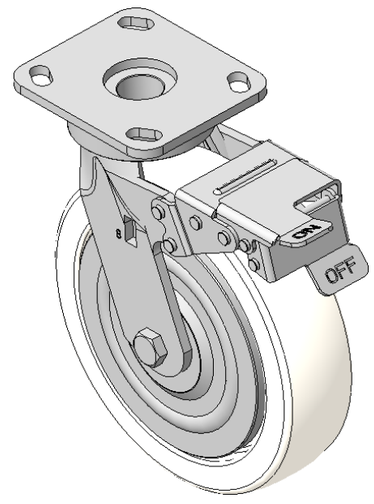

Picture may differ from original product

Castors with Front Brake locking system, Welded Caster Fork Extended control lever surface, Top Plate Mounting Type, Hole spacing 85x70 Polypropylene Wheel Center, Wheel Tread Natural Color Bearing - Ball Bearing

Wheel Tread: PP polypropylene

Wheel Center: PP polypropylene

Drawings are for reference only and may differ from the product

Technical Data

◉ Imperial ○ Metric

Wheel Diameter	8 "
Wheel Width	2 "
Wheel Bearing	Wheels With Ball Bearings
Plate Size	4-9/16 " x 4 "
Bolt Hole Spacing	3-3/8 " x 2-3/4 "
Plate Hole	13/16 " x 3/8 "
Offset	1-3/4 "
Swivel Interference	13-1/2 "
Overall Height	9-1/2 "
Swivel Radius	6-3/4 "
Hardness Of Tread	72±5° Shore D
Load Capacity (Dynamic)	882lbs
Load Capacity (Static)	1323lbs
Temperature	4°F to +140°F
Fork Type	Swivel Caster With Front Brake
Stainless	N/A
Electrical Conductivity	N/A
Anti-Static	N/A
Weight	8.3lbs
Standard	ISO22883

Advantages at a glance

Rolling Resistance	● ● ● ● ●
Operating Noise	● ● ● ○ ○
Floor Surface Preservation	● ● ● ○ ○

Dimensions

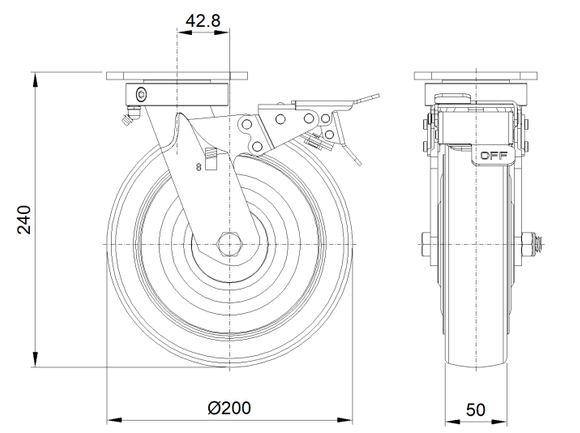

Mounting

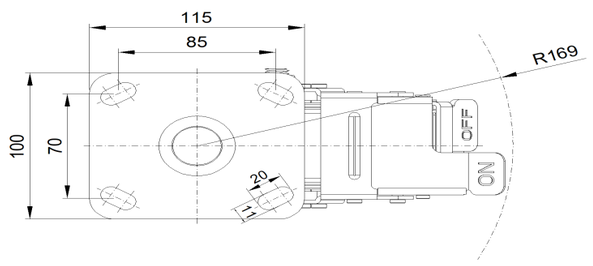

* For any deviation between metric and imperial spec, please refer to the metric spec.

© Copyright 2025 DershengInternational www.dersheng.com