Product Data Sheet

# 1142 Kingpinless Caster (B Type) Series

Non-marking NBR Rubber (milling) Wheel Diameter x Wheel Width 125 x 40mm

EAN

KS-11420500042021

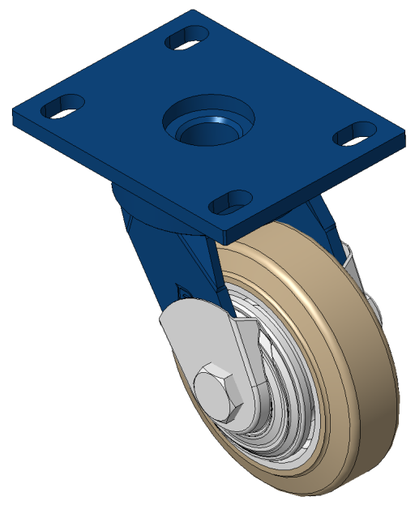

Picture may differ from original product

Swivel Casters, Welded Caster Fork Surface sprayed with blue paint, Mounting Type - Top Plate, Hole spacing 110x75 Cast Iron Wheel Center, High-Quality high-Resilient Rubber Wheel Tread, Cast Iron original color Bearing—Ball Bearing, with special Anti-thread wheel covers

Wheel Tread: Made of high quality and high elastic rubber

Wheel Center: iron core/cast iron core

Drawings are for reference only and may differ from the product

## Technical Data

◉ Imperial ○ Metric

| | |
|---|---|
| Wheel Diameter | 5 " |
| Wheel Width | 1-5/8 " |
| Wheel Bearing | Wheels With Ball Bearings |
| Plate Size | 5-9/16 " x 4-3/8 " |
| Bolt Hole Spacing | 4-5/16 " x3” |
| Plate Hole | 7/8 " x 9/16 " |
| Offset | 1-11/16 " |
| Swivel Interference | 8-1/2 " |
| Overall Height | 6-13/16 " |
| Swivel Radius | 4-1/4 " |
| Hardness Of Tread | 85±5° Shore A |
| Load Capacity (Dynamic) | 551lbs |
| Load Capacity (Static) | 827lbs |
| Temperature | -4°F to +176°F |
| Fork Type | Swivel Caster |
| Stainless | N/A |
| Electrical Conductivity | N/A |
| Anti-Static | N/A |
| Weight | 8.1lbs |
| Standard | ISO22883 |

## Advantages at a glance

| | |
|---|---|
| Rolling Resistance | ● ● ● ○ ○ |
| Operating Noise | ● ● ● ● ○ |
| Floor Surface Preservation | ● ● ● ● ○ |

## Dimensions

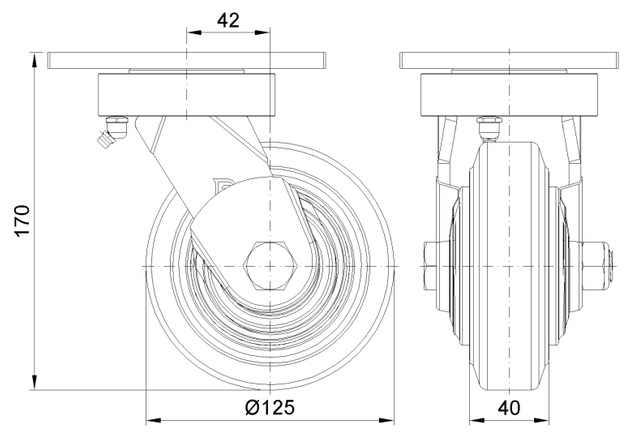


## Mounting

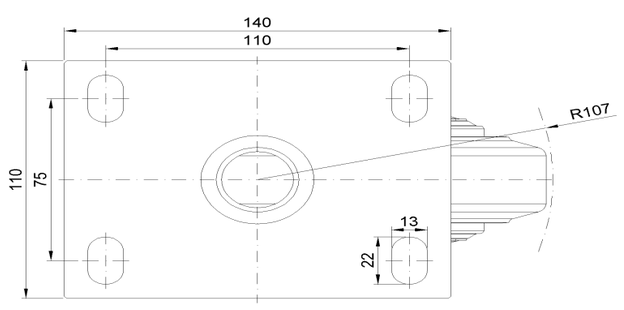


* For any deviation between metric and imperial spec, please refer to the metric spec.

© Copyright 2025 DershengInternational www.dersheng.com