1142 Kingpinless Caster (B Type) Series

CPD Wheel Diameter x Wheel Width 150 x 40mm

EAN

KS-11420600292031

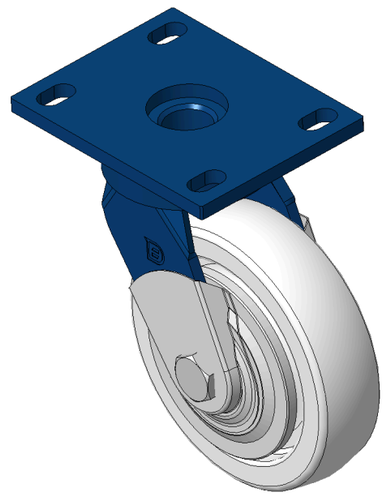

Picture may differ from original product

Drawings are for reference only and may differ from the product

Technical Data

◉ Imperial ○ Metric

Wheel Diameter	6 "
Wheel Width	1-5/8 "
Wheel Bearing	Wheels With Ball Bearings
Plate Size	5-9/16 " x 4-3/8 "
Bolt Hole Spacing	4-5/16 " x3”
Plate Hole	7/8 " x 9/16 "
Offset	1-11/16 "
Swivel Interference	9-1/2 "
Overall Height	7-7/8 "
Swivel Radius	4-13/16 "
Hardness Of Tread	72±5° Shore D
Load Capacity (Dynamic)	772lbs
Load Capacity (Static)	1157lbs
Temperature	4°F to +140°F
Fork Type	Swivel Caster
Stainless	N/A
Electrical Conductivity	N/A
Anti-Static	N/A
Weight	7.6lbs
Standard	ISO22883

Advantages at a glance

Rolling Resistance	●●●●●
Operating Noise	●●●○○
Floor Surface Preservation	●●●○○

Dimensions

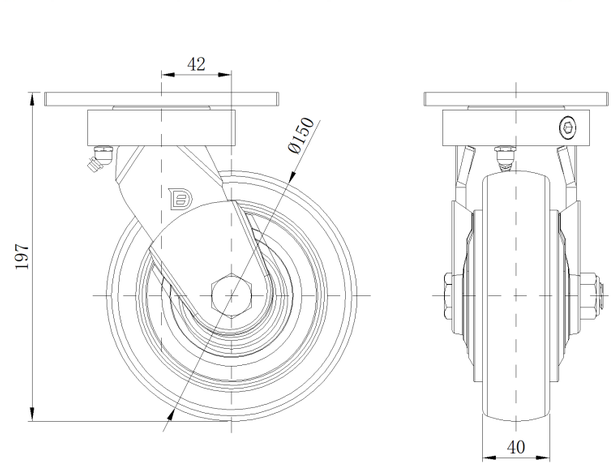

Mounting

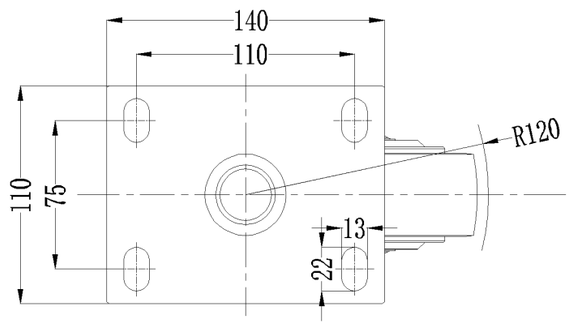

* For any deviation between metric and imperial spec, please refer to the metric spec.

© Copyright 2026 DershengInternational www.dersheng.com