1142 Kingpinless Caster (B Type) Series

ZQPU (brown round) Wheel Diameter x Wheel Width 150 x 24 (51) mm

EAN

KS-11420600804071

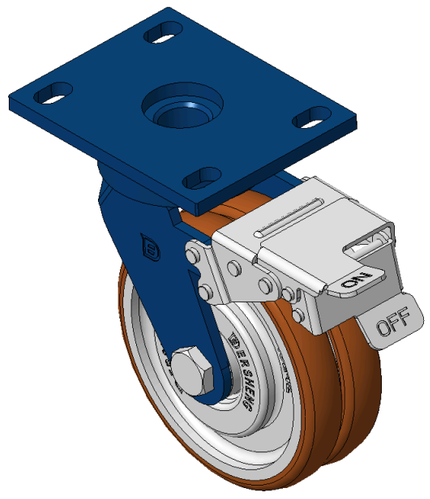

Drawings are for reference only and may differ from the product

Picture may differ from original product

Technical Data

◉ Imperial ○ Metric

Wheel Diameter	6 "
Wheel Width	1 "
Wheel Bearing	Wheels With Ball Bearings
Plate Size	5-9/16 " x 4-3/8 "
Bolt Hole Spacing	4-5/16 " x3”
Plate Hole	9/16 " x 7/8 "
Offset	1-11/16 "
Swivel Interference	12-11/16 "
Overall Height	7-7/8 "
Swivel Radius	6-3/8 "
Hardness Of Tread	92±5° Shore A
Load Capacity (Dynamic)	1213lbs
Load Capacity (Static)	1819lbs
Temperature	-4°F to +158°F
Fork Type	Swivel Caster With Front Brake
Stainless	N/A
Electrical Conductivity	N/A
Anti-Static	N/A
Weight	13.2lbs
Standard	ISO22883

Advantages at a glance

Rolling Resistance	●●●●●
Operating Noise	●●●●●
Floor Surface Preservation	●●●●●

Dimensions

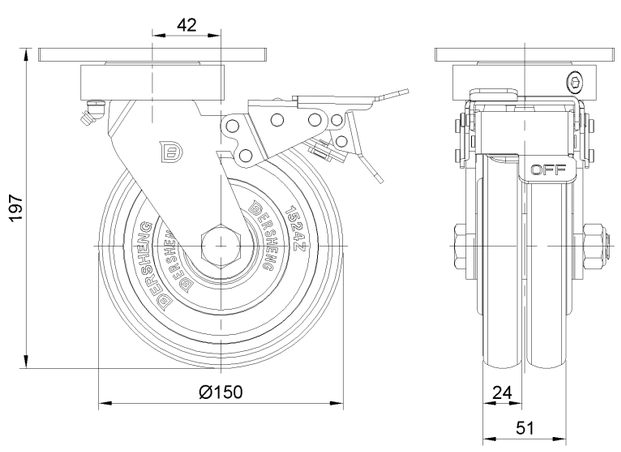

Mounting

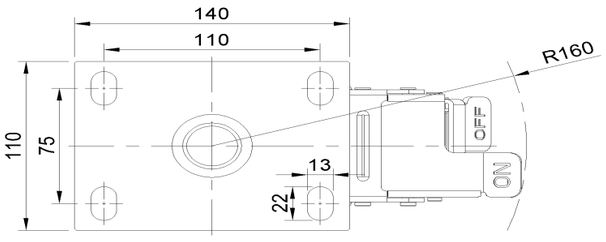

* For any deviation between metric and imperial spec, please refer to the metric spec.

© Copyright 2026 DershengInternational www.dersheng.com