# 1142 Kingpinless Caster (B Type) Series

Non-marking NBR Rubber (milling) Wheel Diameter x Wheel Width 200 x 44mm

EAN

KS-11420800044111

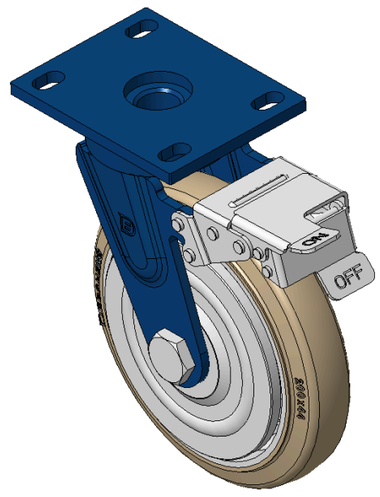


Picture may differ from original product

Drawings are for reference only and may differ from the product

## Technical Data

◉ Imperial ○ Metric

| | |
|---|---|
| Wheel Diameter | 8 " |
| Wheel Width | 1-3/4 " |
| Wheel Bearing | Wheels With Ball Bearings |
| Plate Size | 5-9/16 " x 4-3/8 " |
| Bolt Hole Spacing | 4-5/16 " x3” |
| Plate Hole | 9/16 " x 7/8 " |
| Offset | 1-7/8 " |
| Swivel Interference | 13-1/2 " |
| Overall Height | 9-15/16 " |
| Swivel Radius | 6-13/16 " |
| Hardness Of Tread | 85±5° Shore A |
| Load Capacity (Dynamic) | 772lbs |
| Load Capacity (Static) | 1157lbs |
| Temperature | -4°F to +176°F |
| Fork Type | Swivel Caster With Front Brake |
| Stainless | N/A |
| Electrical Conductivity | N/A |
| Anti-Static | N/A |
| Weight | 13.1lbs |
| Standard | ISO22883 |

## Advantages at a glance

| | |
|---|---|
| Rolling Resistance | ●●●○○ |
| Operating Noise | ●●●●○ |
| Floor Surface Preservation | ●●●●○ |

## Dimensions




## Mounting

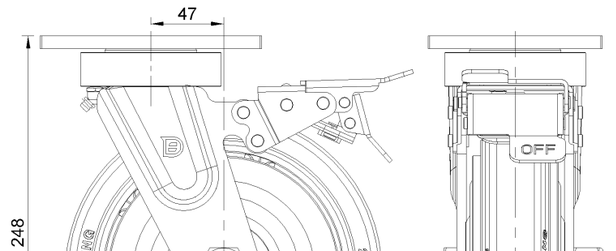


* For any deviation between metric and imperial spec, please refer to the metric spec.

© Copyright 2026 DershengInternational www.dersheng.com