# 1146 46 Ascendant Series Caster Series(All Plastic)

Double-Ball Full-Effect Wheel (All-Dark Gray) Wheel Diameter × Wheel Width 75 × 14mm

EAN

KS-11460300452053

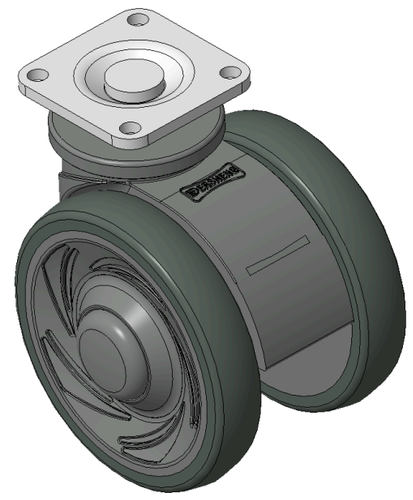

Picture may differ from original product

Drawings are for reference only and may differ from the product

## Technical Data

◉ Metric ○ Imperial

| | |
|---|---|
| Wheel Diameter | 75mm |
| Wheel Width | 60mm |
| Wheel Bearing | Wheels With Ball Bearings |
| Plate Size | 42 x 42mm |
| Bolt Hole Spacing | 32x32mm |
| Plate Hole | 5mm |
| Offset | 23mm |
| Swivel Interference | 134mm |
| Overall Height | 91mm |
| Swivel Radius | 67mm |
| Hardness Of Tread | 72±5° Shore A |
| Load Capacity (Dynamic) | 90kgs |
| Load Capacity (Static) | 135kgs |
| Temperature | -20°C to +60°C |
| Fork Type | Swivel Caster |
| Stainless | N/A |
| Electrical Conductivity | N/A |
| Anti-Static | N/A |
| Weight | 0.27kgs |
| Standard | ISO22881 |

## Advantages at a glance

| | |
|---|---|
| Rolling Resistance | ●●●●● |
| Operating Noise | ●●●●● |
| Floor Surface Preservation | ●●●●● |

## Dimensions

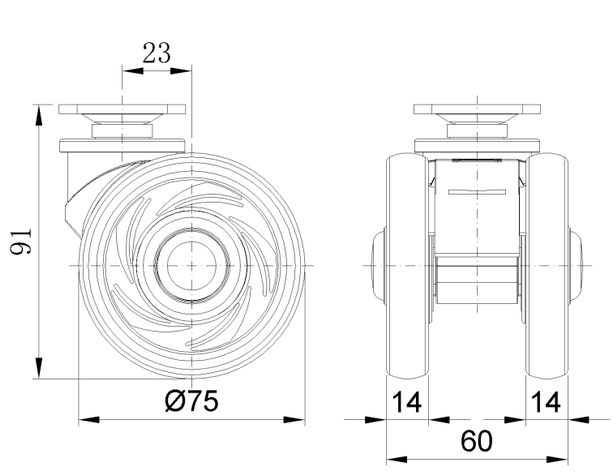


## Mounting

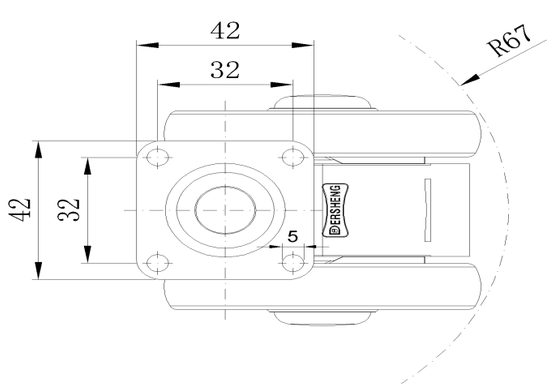


* For any deviation between metric and imperial spec, please refer to the metric spec.

© Copyright 2026 DershengInternational www.dersheng.com