1146 46 Ascendant Series Caster Series(All Plastic)

Double-Ball Full-Effect Wheel (All-Black) Wheel Diameter × Wheel Width 75 × 14mm

EAN

KS-11460300452063

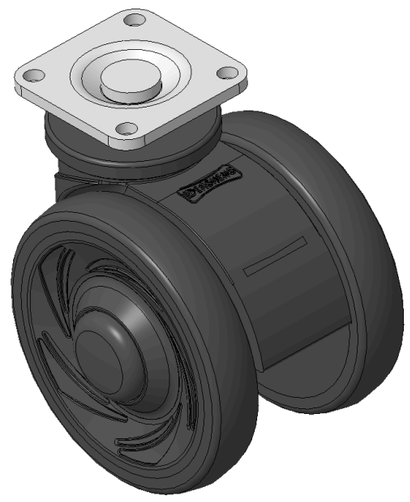

Drawings are for reference only and may differ from the product

Picture may differ from original product

Technical Data

◉ Imperial ○ Metric

Wheel Diameter	3 "
Wheel Width	2-7/16 "
Wheel Bearing	Wheels With Ball Bearings
Plate Size	1-11/16 " x 1-5/8 "
Bolt Hole Spacing	1-1/4 “x1-1/4”
Plate Hole	1/4 "
Offset	15/16 "
Swivel Interference	5-3/8 "
Overall Height	3-5/8 "
Swivel Radius	2-11/16 "
Hardness Of Tread	72±5° Shore A
Load Capacity (Dynamic)	198lbs
Load Capacity (Static)	298lbs
Temperature	-4°F to +140°F
Fork Type	Swivel Caster
Stainless	N/A
Electrical Conductivity	N/A
Anti-Static	N/A
Weight	0.6lbs
Standard	ISO22881

Advantages at a glance

Rolling Resistance	●●●●●
Operating Noise	●●●●●
Floor Surface Preservation	●●●●●

Dimensions

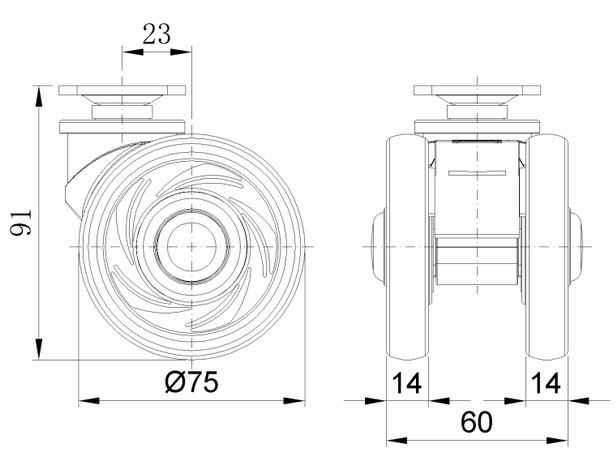

Mounting

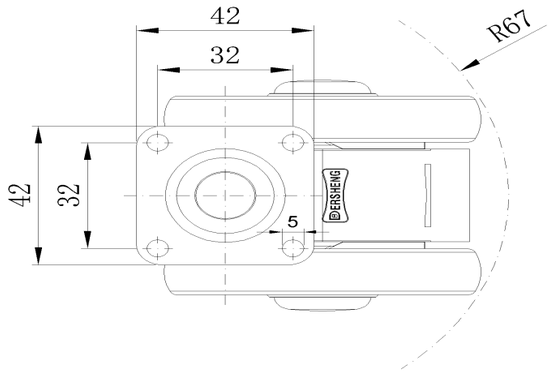

* For any deviation between metric and imperial spec, please refer to the metric spec.

© Copyright 2026 DershengInternational www.dersheng.com