# 1146 46 Ascendant Series Caster Series(All Plastic)

Classic Double-Ball Full-Effect Wheel (White-Dark Gray) Wheel Diameter × Wheel Width 75 × 14mm

EAN

KS-11460391459413

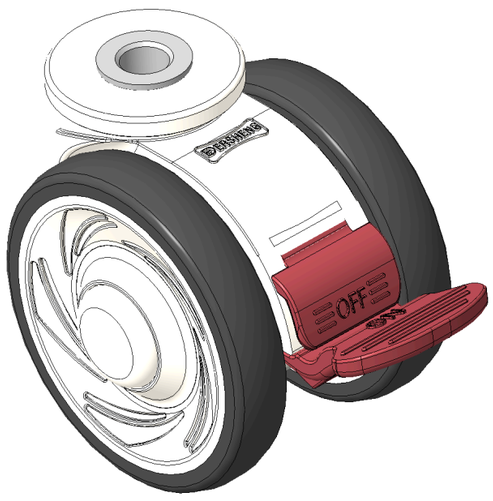

Picture may differ from original product

Drawings are for reference only and may differ from the product

## Technical Data

◉ Imperial ○ Metric

| | |
|---|---|
| Wheel Diameter | 3 " |
| Wheel Width | 2-7/16 " |
| Wheel Bearing | Wheels With Ball Bearings |
| Single Bolt HoleCentre Hole | 3/8 " |
| Offset | 15/16 " |
| Swivel Interference | 7-1/16 " |
| Overall Height | 3-1/4 " |
| Swivel Radius | 3-9/16 " |
| Hardness Of Tread | 72±5° Shore A |
| Load Capacity (Dynamic) | 198lbs |
| Load Capacity (Static) | 298lbs |
| Temperature | -4°F to +140°F |
| Fork Type | Swivel Caster With Total Brake |
| Stainless | N/A |
| Electrical Conductivity | N/A |
| Anti-Static | N/A |
| Weight | 0.5lbs |
| Standard | ISO22881 |

## Advantages at a glance

| | |
|---|---|
| Rolling Resistance | ●●●●● |
| Operating Noise | ●●●●● |
| Floor Surface Preservation | ●●●●● |

## Dimensions

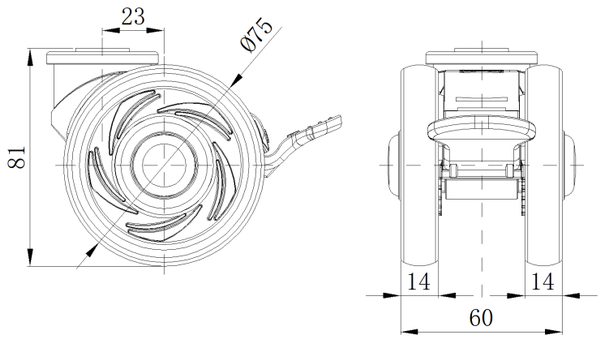


## Mounting

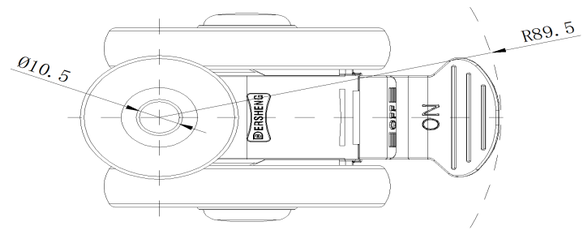


* For any deviation between metric and imperial spec, please refer to the metric spec.

© Copyright 2026 DershengInternational www.dersheng.com