# 1146 46 Ascendant Series Caster Series(All Plastic)

Resolute Rubber wheel (window gray dark gray) Wheel Diameter x Wheel Width 100 x 18mm

EAN

KS-11460400452033

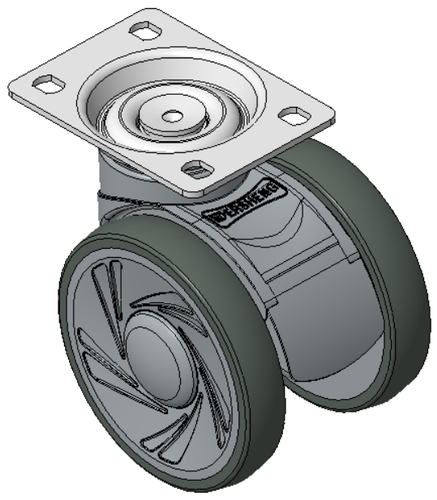

Drawings are for reference only and may differ from the product

Picture may differ from original product

## Technical Data

◉ Imperial ○ Metric

| | |
|---|---|
| Wheel Diameter | 4 " |
| Wheel Width | 3-3/8 " |
| Wheel Bearing | Wheels With Ball Bearings |
| Plate Size | 3-11/16 " x 2-1/2 " |
| Bolt Hole Spacing | 3 " x 1-13/16 " |
| Plate Hole | 3/8 " x 3/8 " |
| Offset | 1-5/16 " |
| Swivel Interference | 7-1/4 " |
| Overall Height | 4-15/16 " |
| Swivel Radius | 3-5/8 " |
| Hardness Of Tread | 72±5° Shore A |
| Load Capacity (Dynamic) | 220lbs |
| Load Capacity (Static) | 331lbs |
| Temperature | -4°F to +140°F |
| Fork Type | Swivel Caster |
| Stainless | N/A |
| Electrical Conductivity | N/A |
| Anti-Static | N/A |
| Weight | 1.7lbs |
| Standard | ISO22881 |

## Advantages at a glance

| | |
|---|---|
| Rolling Resistance | ●●●●● |
| Operating Noise | ●●●●● |
| Floor Surface Preservation | ●●●●● |

## Dimensions

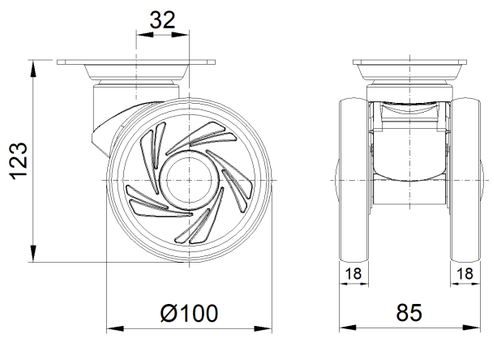


## Mounting

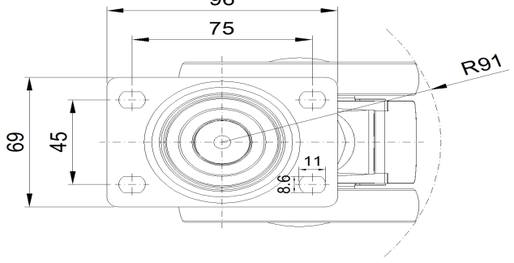


* For any deviation between metric and imperial spec, please refer to the metric spec.



© Copyright 2026 DershengInternational www.dersheng.com