1146 46 Ascendant Series Caster Series(All Plastic)

Double-Ball Full-Effect Wheel (White-Dark Gray) Wheel Diameter × Wheel Width 125 × 18mm

EAN

KS-11460500451513

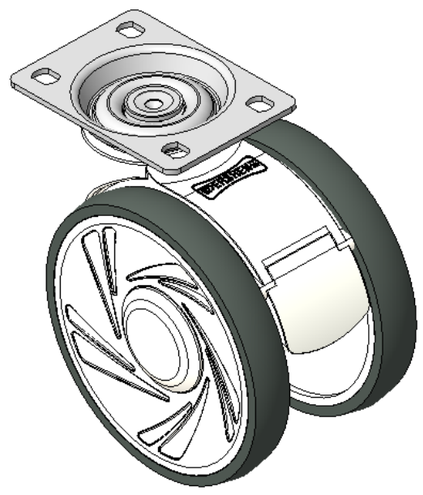

Picture may differ from original product

Drawings are for reference only and may differ from the product

Technical Data

◉ Metric ○ Imperial

Wheel Diameter	125mm
Wheel Width	85.5mm
Wheel Bearing	Wheels With Ball Bearings
Plate Size	96 x 69mm
Bolt Hole Spacing	75 x 45mm
Plate Hole	11 x 8.6mm
Overall Height	144mm
Hardness Of Tread	72±5° Shore A
Load Capacity (Dynamic)	110kgs
Load Capacity (Static)	165kgs
Temperature	-20°C to +60°C
Fork Type	Rigid Caster
Stainless	N/A
Electrical Conductivity	N/A
Anti-Static	N/A
Weight	0.76kgs
Standard	ISO22881

Advantages at a glance

Rolling Resistance	●●●●●
Operating Noise	●●●●●
Floor Surface Preservation	●●●●●

Dimensions

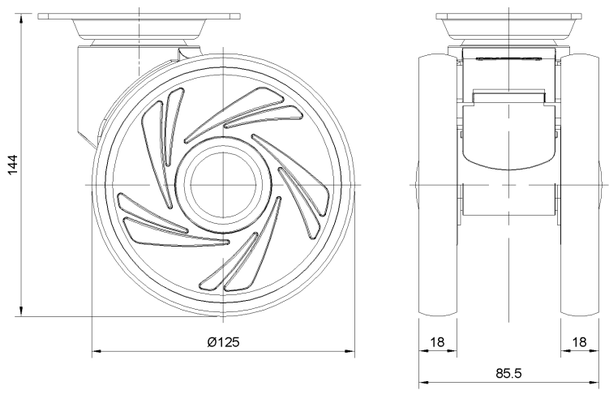

Mounting

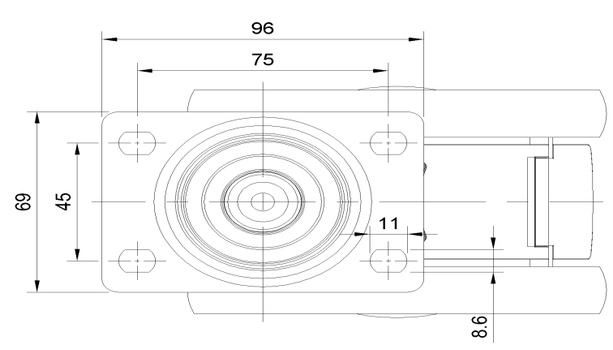

* For any deviation between metric and imperial spec, please refer to the metric spec.

© Copyright 2026 DershengInternational www.dersheng.com