1146 46 Ascendant Series Caster Series(All Plastic)

Double-Ball Full-Effect Wheel (White-Dark Gray) Wheel Diameter × Wheel Width 125 × 18mm

EAN

KS-11460500455623

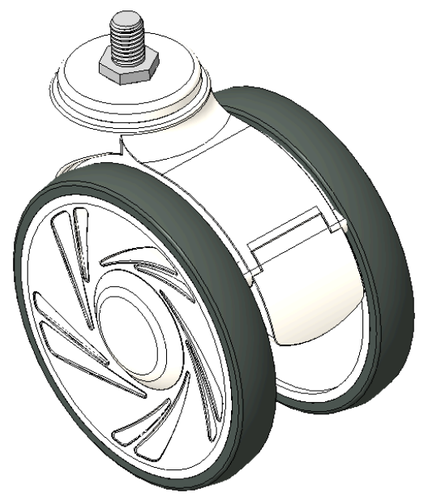

Drawings are for reference only and may differ from the product

Picture may differ from original product

Technical Data

◉ Metric ○ Imperial

Wheel Diameter	125mm
Wheel Width	85.5mm
Wheel Bearing	Wheels With Ball Bearings
Threaded Stem	M12
Threaded Length	17mm
Offset	40mm
Swivel Interference	220mm
Overall Height	144mm
Swivel Radius	110mm
Hardness Of Tread	72±5° Shore A
Load Capacity (Dynamic)	110kgs
Load Capacity (Static)	165kgs
Temperature	-20°C to +60°C
Fork Type	Swivel Caster
Stainless	N/A
Electrical Conductivity	N/A
Anti-Static	N/A
Weight	0.63kgs
Standard	ISO22881

Advantages at a glance

Rolling Resistance	●●●●●
Operating Noise	●●●●●
Floor Surface Preservation	●●●●●

Dimensions

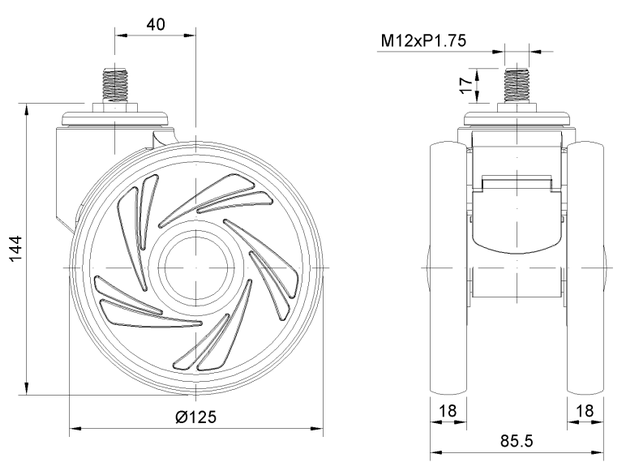

Mounting

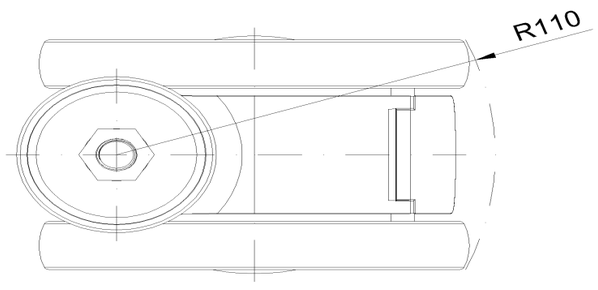

* For any deviation between metric and imperial spec, please refer to the metric spec.

© Copyright 2026 DershengInternational www.dersheng.com